COMPU-SPREAD®

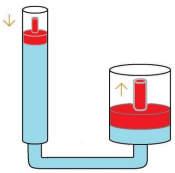

hydraulic design, fundamentals, and diagnosis; September, 2019

TRUCK & TRAILER Specialties, Inc.

rexroth A Bosch Company

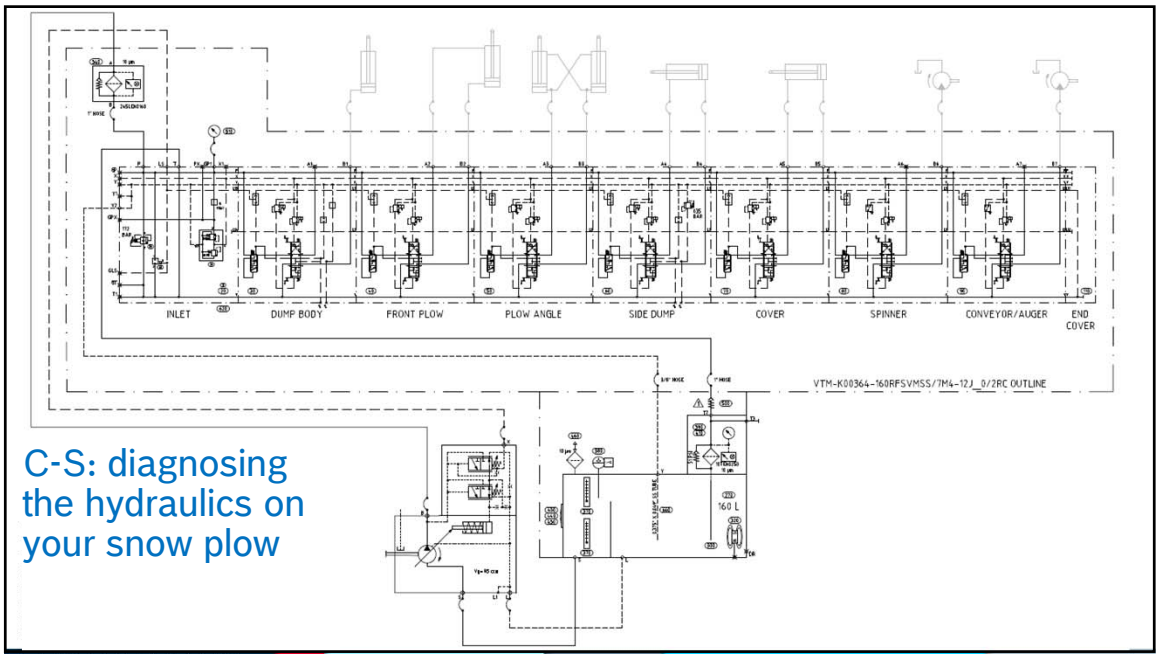

C-S: diagnosing the hydraulics on your snow plow

Troubleshooting Compu-Spread hydraulic systems

Think first . . .

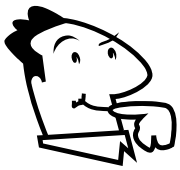

then troubleshoot !

rexroth
A Bosch Company

C-S hydraulic troubleshooting: always check the obvious (easy) things first!

- Is there hydraulic fluid in the reservoir? (Do not rely on the sight glass only for visual confirmation.)
- Is the air breather clean? If not, as the hydraulic fluid level lowers and raises due to differential cylinder demand, and changes in fluid temperature, a partial vacuum can be created, hence, not allowing the fluid to flow as per design towards the inlet of the pump.
- Is air entering the system through the inlet line of the pump due to loose 'T'-clamps (or gear clamps, which should not be used) or cracked welds at the coupling or fitting, or an hardened 'o'-ring on the SAE inlet flange or fitting?
- Is the inlet hose collapsed, or partially collapsed, allowing for interrupted fluid flow to the inlet of the pump, causing cavitation, and hence noise?
- Is the inlet hose inner lining no longer adhering to the inside of the hose, causing a check valve (or flapper) effect, hence obstructing the flow of hydraulic fluid from the reservoir to the pump's inlet?

rexroth
A Bosch Company

C-S hydraulic troubleshooting: always check the obvious (easy) things first!

- With a lateral inlet, are the ‘P’ & ‘T’ hoses swapped around as they are both #16 SAE ports? Most valves can allow for a circulator flow path without any work being accomplished.

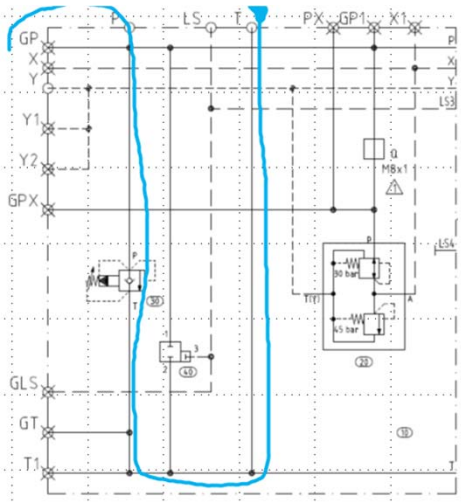

rexroth
A Bosch Company

C-S hydraulic troubleshooting: always check the obvious (easy) things first!

- Is the pump rotating in the right direction as per how it was manufactured? Most pumps are uni-rotational, hence we must strictly observe the direction of rotation.

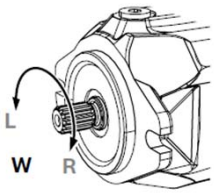

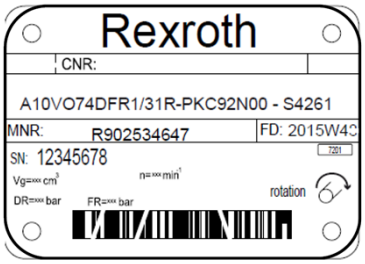

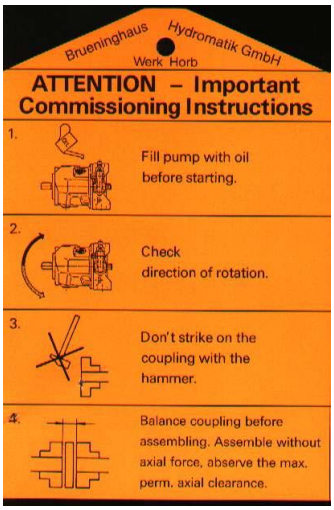

W	Bi-directional (counter-clockwise and clockwise rotation permissible)
L	Counter-clockwise
R	Clockwise

rexroth
A Bosch Company

C-S: A10VO85 install

What improvements would you make if this was your system?

1) pump not painted
2) black iron fittings used
3) NPT fittings used
4) too many fittings used hence too many joints!
5) does the inlet hose match the pump's inlet port?
6) how many clamps on the inlet hose?

rexroth
A Bosch Company

C-S: A10VO85 nomograph

- Fittings builder installed is for 1-1/2" hose!
- 85 has a max flow rate of 55 USGPM (212 l/min) @ 2500 rpm

Vg 85 @ 1000 rpm

Vg 85 @ 1700 rpm

Vg 85 @ 2500 rpm

In this example then, with an 1-1/2" hose, we would have to limit the engine RPM to 1000 with the pump at max. displacement in order to not damage the pump or at least reducing its operating life.

Rules of Thumb velocities:
inlet line: 2-4 ft/sec
pressure lines:10-20 ft/sec
return lines:10-15 ft/sec

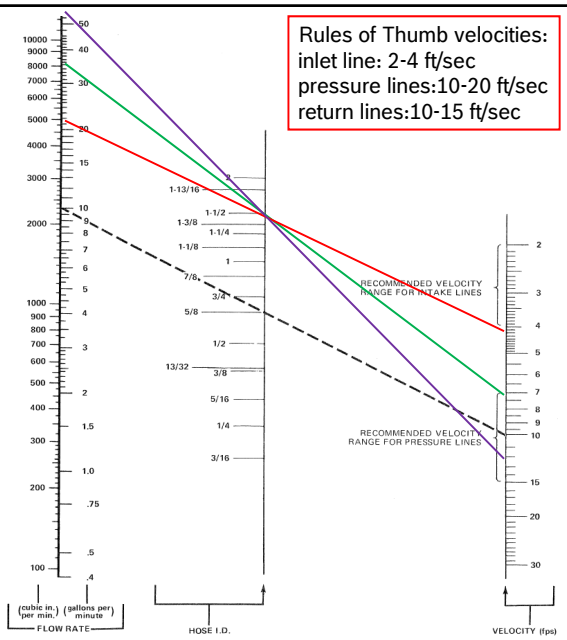

C-S: pump fittings for A10VO85 & 100

- true barb fitting (not a bead)
- 2-1/2” SAE code 61 to 2-1/2” barb, or
- 2-1/2” SAE code 61 to 2” barb
- 2x stainless steel T-clamps
- 2-1/2” SAE code 61 split flange kit, c/w hardware and Buna-’N’ ‘o’-ring

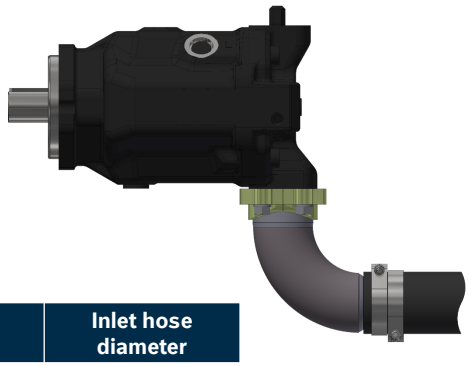

Material #	Material description	Inlet hose diameter
R987484570	CS-A10VO85/100-FK-SF40-90-HB25-2XSSTCL	2-1/2”
R987484569	CS-A10VO85/100-FK-SF40-90-HB20-2XSSTCL	2”

rexroth
A Bosch Company

C-S: A10VO100 install

with 2” hose

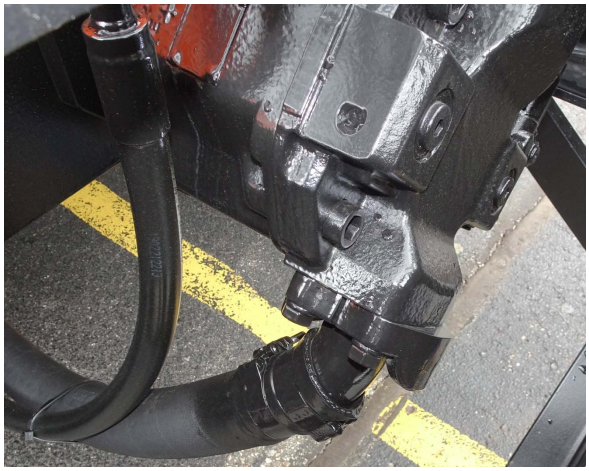

rexroth
A Bosch Company

C-S: A10VO100 install (with low oil shut-off valve (LOSOV))

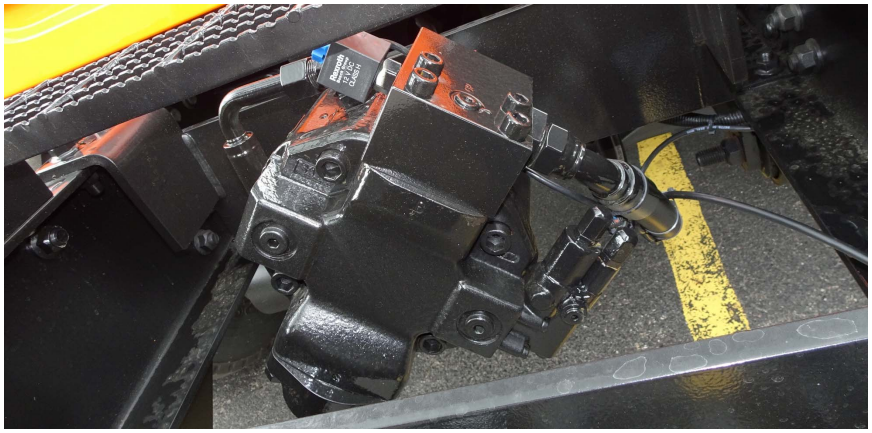

rexroth
A Bosch Company

C-S: A10VO 100 nomograph

- fittings which we can supply are for the 2" hose!
- 100 has a max flow rate of 53 USGPM (200 l/min) @ 2000 rpm

Vg 100 @ 1000 rpm

Vg 100 @ 1500 rpm

Vg 100 @ 1800 rpm

In this example then, with an 2" hose, we would have to limit the engine RPM to 1500 with the pump at max. displacement in order to not damage the pump or at least reducing its operating life.

Rules of Thumb velocities:
inlet line: 2-4 ft/sec
pressure lines:10-20 ft/sec
return lines:10-15 ft/sec

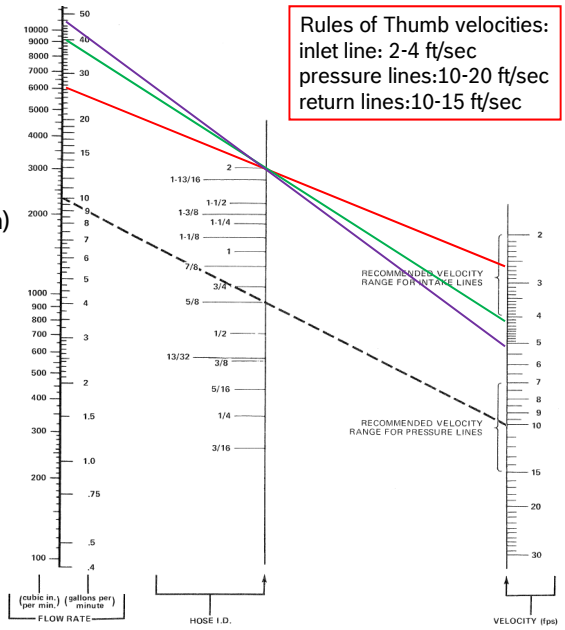

C-S: A10VO100 install

nameplate missing

rexroth
A Bosch Company

C-S: A10VO 100 nomograph

- fittings which we supply are for the 2-1/2" hose!
- 100 has a max flow rate of 53 USGPM (200 l/min) @ 2000 rpm

Vg 100 @ 1000 rpm

Vg 100 @ 1500 rpm

Vg 100 @ 1800 rpm

Vg 100 @ 2000 rpm

In this example then, with an 2-1/2" hose, we would have to limit the engine RPM to 2000 with the pump at max. displacement in order to not damage the pump as that is the maximum speed at full displacement.

Rules of Thumb velocities:
inlet line: 2-4 ft/sec
pressure lines:10-20 ft/sec
return lines:10-15 ft/sec

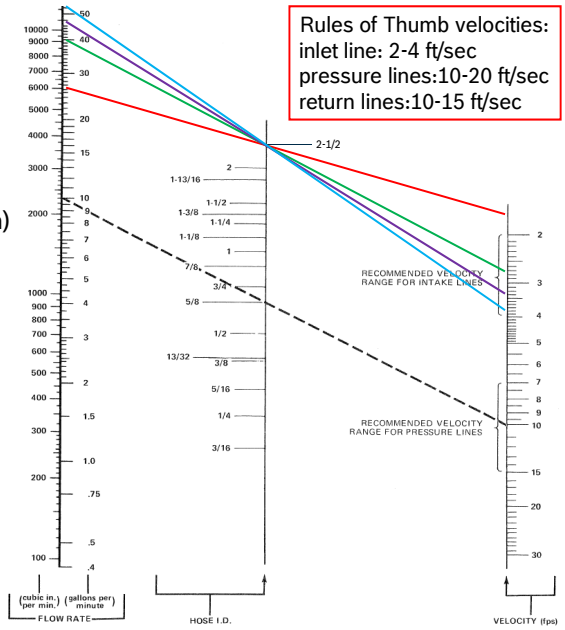

C-S: A10VO85 & 100 case drain (leakage) line

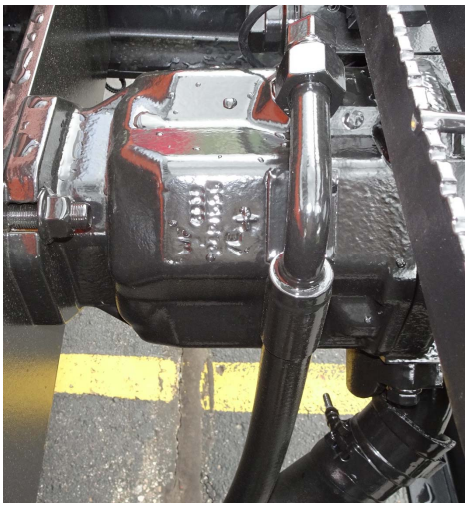

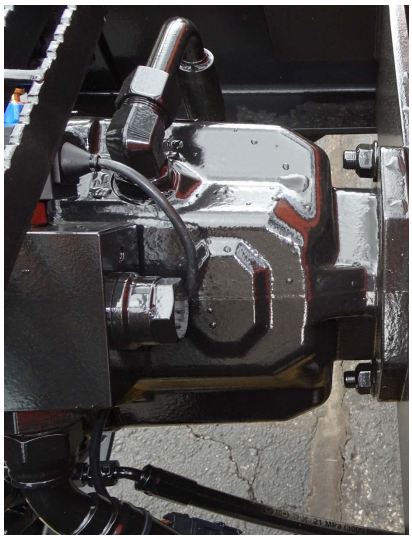

rexroth
A Bosch Company

C-S: A10VO85 & 100 case drain (leakage) line

- always use as a minimum the same size hose as the leakage line ports (L or L1), using the higher of the two ports, depending on the mounting of the pump. Preferably would be to use the next hose size up, in order to reduce case pressure, especially in high dynamic situations and cold weather which increases the fluid's viscosity.
- always pre-fill the housing with the same hydraulic fluid as the system will be using prior to start-up in order to lubricate the bearings, shaft seal, and other moving parts
- remember that there is no direct communication between the inlet (blue) and the housing, or case (green) of the pump (which is acting as a mini-reservoir)

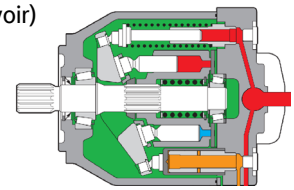

rexroth
A Bosch Company

Compu-Spread: the importance of sizing the case-drain line correctly

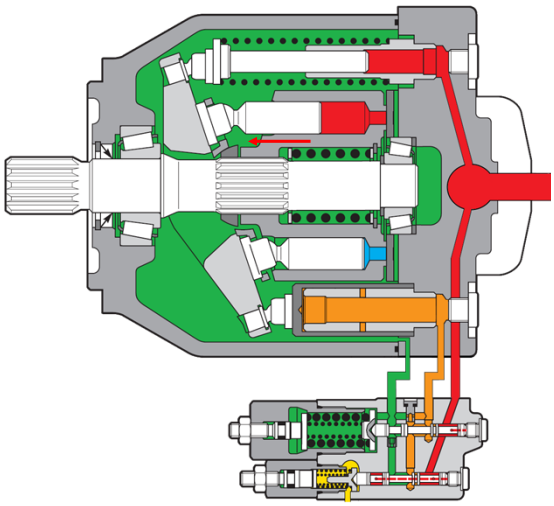

- we have two (2x) single acting cylinders
- we have two sequence valves
- we have a flow control valve in the form of a fixed orifice
- we have an hydraulic stroke limiter on the stroking piston which ensures a certain quantity of exchange fluid when the pump is in the near de-stroked position
- we have nine (9x) pistons which have tolerances, which means theoretically, 4-1/2 flow sources
- we have cross-port & internal leakage across the cylinder barrel and distributor plate
- we have dynamic responses which can be as fast as 70 milliseconds which means a very high flow rate for a very short duration of time
- and, we have cold weather! (fluid viscosity)

Axial Piston Pump type A10VO series 31

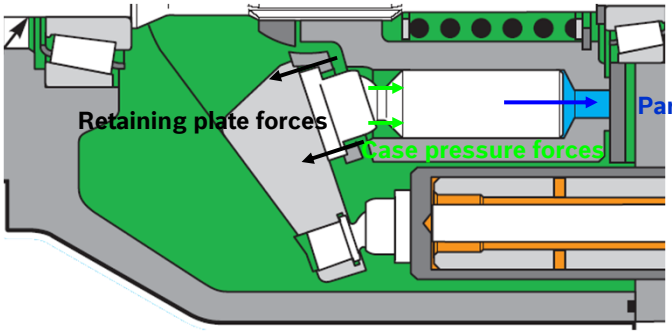

Case drain pressure
Maximum pressure of leakage fluid (at ports L, L_1):
Maximum 7 psi (0.5 bar) higher than input pressure at port S, but not higher than 30 psi (2 bar) absolute.

rexroth
A Bosch Company

C-S: A10VO pumps, a real life application review

Steve, please take a photo of the “good pump on shelf” including a photo of the nameplate

regards,

Franklin de Waard
DCCA/SLM

Tel. +1 905 714-4838
From: steve @gmail.com>
Sent: August 16,
To: de Waard Franklin (DCCA/SLM) <Franklin.deWaard@boschrexroth.ca>
Subject: Re: 2009 vehicle which can only reach 800 psi

We have a good pump on shelf. Do you think this is same configuration

Which port is the inlet and which is the outlet?

rexroth
A Bosch Company

C-S: A10VO pumps, a real life application review

With dimensions, we can figure out the type of pump, displacement, and direction of rotation

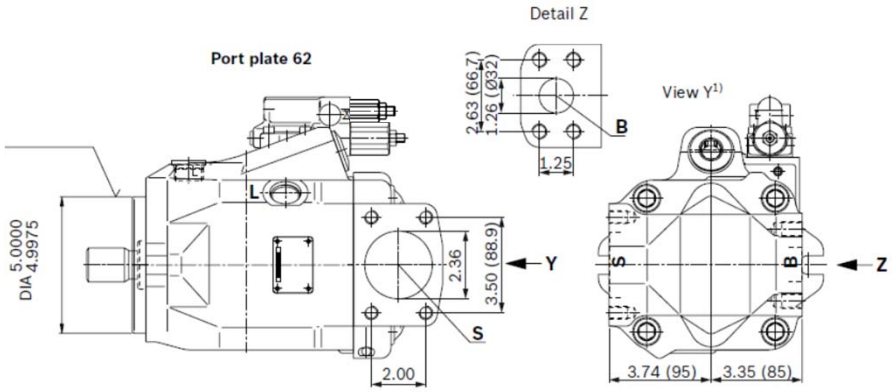

1) Dimensions of working ports turned through 180° for counter-clockwise rotation

rexroth
A Bosch Company

C-S: A10VO pumps, checking the volumetric efficiency

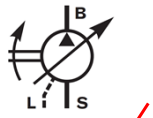

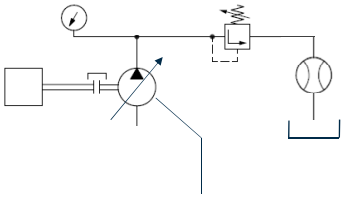

rexroth
A Bosch Company

C-S: A10VO pumps – checking the volumetric efficiency

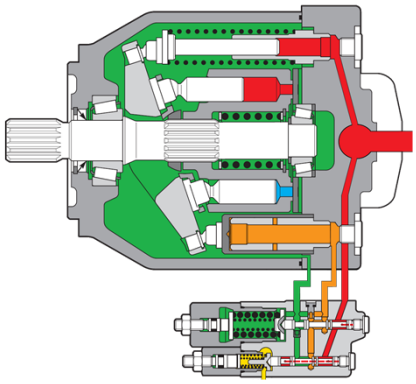

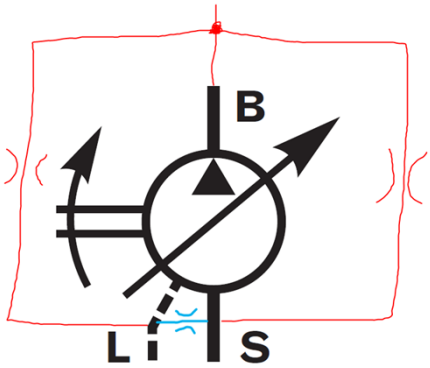

In order to properly check the volumetric efficiency of the pump, we have to turn it into a fixed displacement pump. How do we do that?

rexroth
A Bosch Company

C-S: A10VO pumps – checking the volumetric efficiency

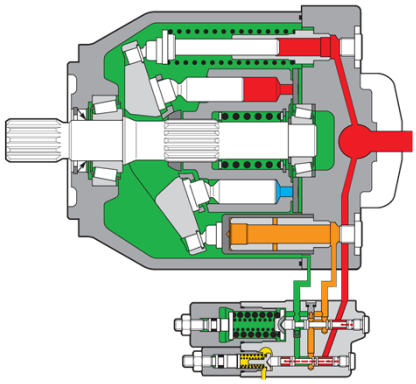

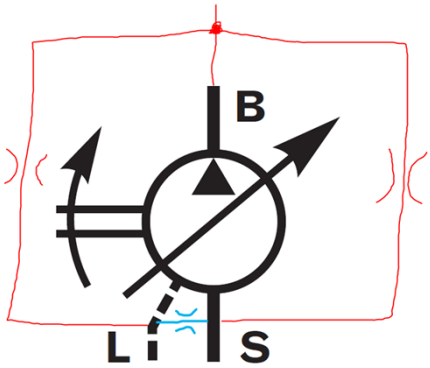

In order to properly check the volumetric efficiency of the pump, we have to turn it into a fixed displacement pump. How do we do that? We render the LS controller useless by turning it in and we ensure the DR controller (pressure compensator) is higher than the relief setting while doing our test. This means that the pump is at maximum displacement!

rexroth
A Bosch Company

C-S: A10VO series 31 pumps – checking the volumetric efficiency

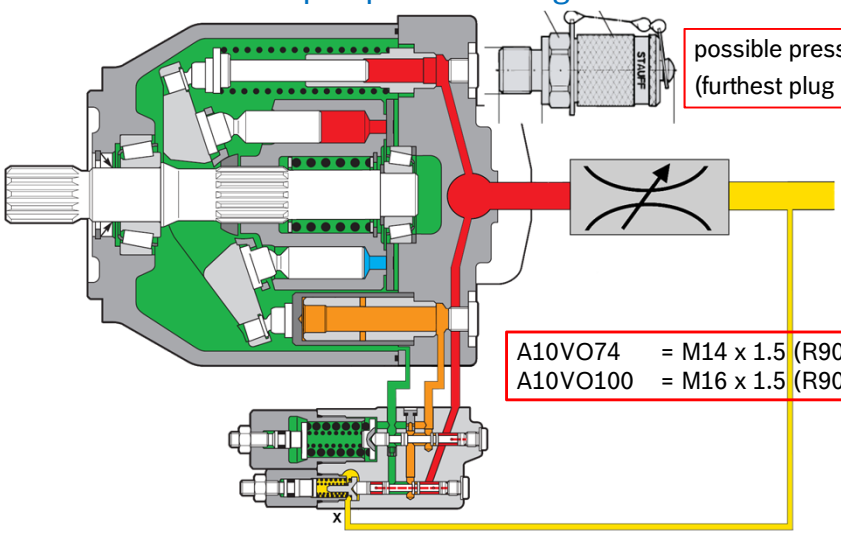

possible pressure gauge location
(furthest plug away from controller)

A10VO74 = M14 x 1.5 (R901329874)
A10VO100 = M16 x 1.5 (R901453061)

rexroth
A Bosch Company

C-S: A10VO series 52 pumps – checking the volumetric efficiency

possible pressure gauge location

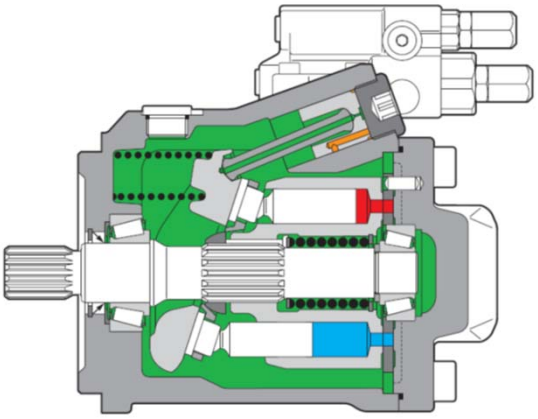

Good for testing system pressure; not good for a permanent set-up, as the M8 x 1 adaptor fitting (R978017223) is structurally too weak!

C-S: A10VO pumps, checking the volumetric efficiency

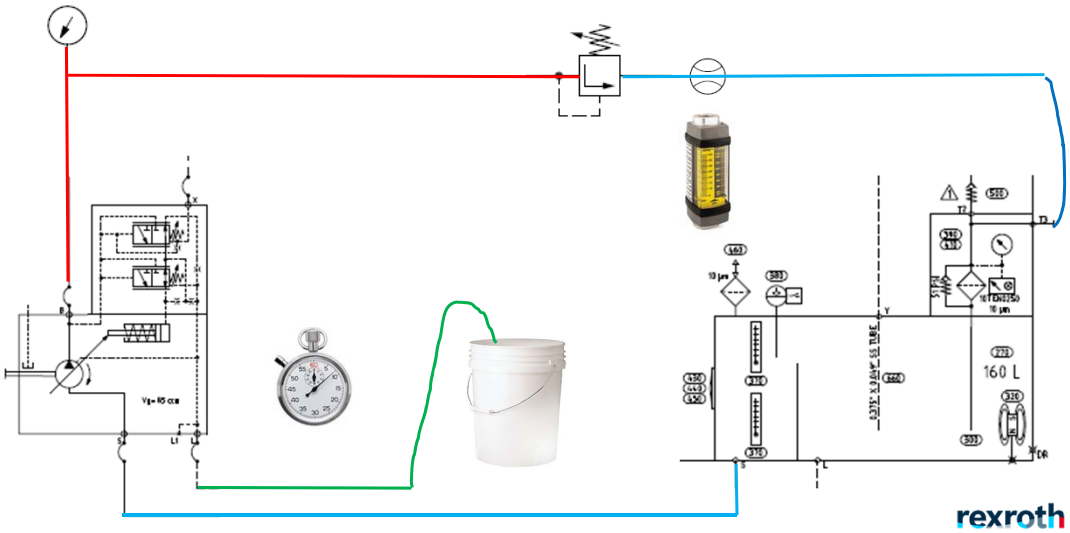

rexroth
A Bosch Company

C-S: A10VO pumps, checking the volumetric efficiency

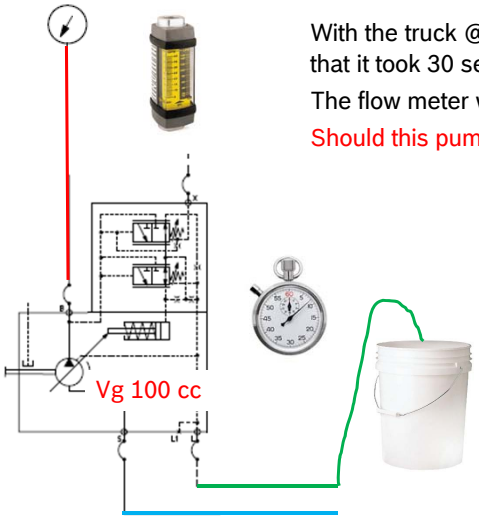

With the truck @ 1200 rpm, and the relief valve set at 2000 psi, say that it took 30 seconds to fill the bucket half-way (therefore 5 USGPM).

The flow meter was reading 22 USGPM.

Should this pump be removed, or does it pass?

$$Q = \frac{Vg \text{ (displacement) x rpm}}{231 \text{ cu.in/ 1 US gallon}}$$

$$= \frac{6.1 \text{ cu. in./rev x 1200 rpm}}{231}$$

= 31.6 USGPM x 93 % efficiency

= 29.5 USGPM

31.6 – 22 = 9.6 means the pump is 69 % efficient.

with 5 USGPM coming out of the case drain, that means that 2-1/2 USGPM is internal leakage

A Bosch Company

C-S: A10VO pumps – checking the volumetric efficiency

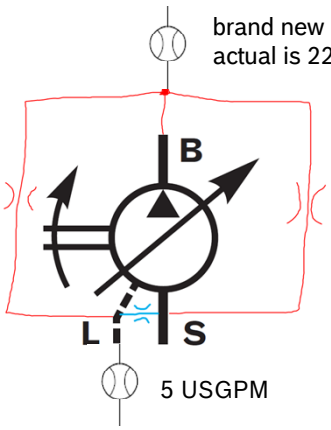

brand new should be 29.6 USGPM
actual is 22 USGPM (difference is 7.5 USGPM)

7.5 USGPM less the 5 USGPM going through the case drain line which means that 2-1/2 USGPM is internal leakage and heat generation

$$HP = \frac{Q \times \Delta P}{1714} = 2.9 \text{ hp}$$

rexroth
A Bosch Company

C-S: A10VO pumps, checking the volumetric efficiency

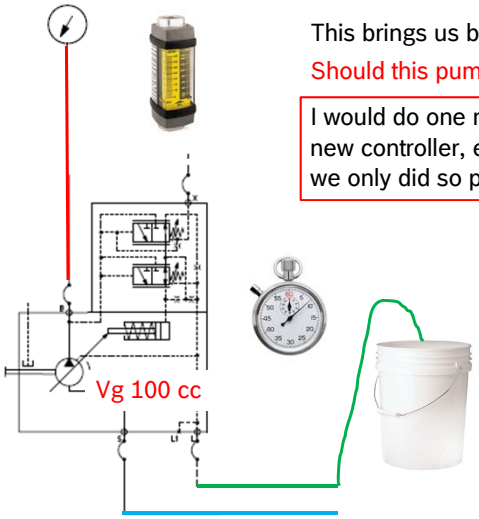

This brings us back to our question:

Should this pump be removed, or does it pass?

I would do one more thing should that be available, try a new controller, even though we took it out of the equation, we only did so partially

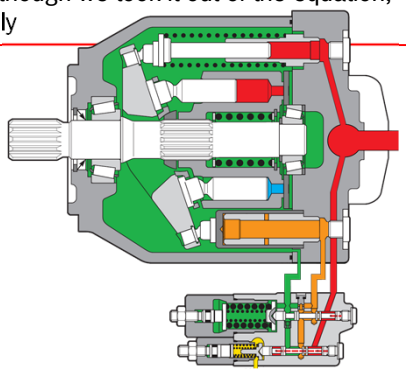

rexroth
A Bosch Company

C-S: A10VO pumps – checking the controller

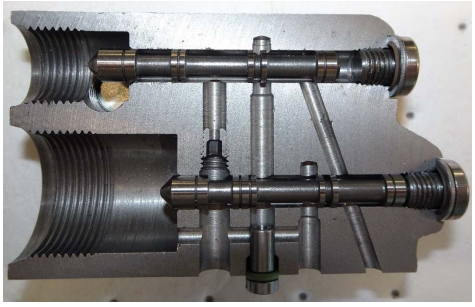

Should the pump pass the efficiency test, yet, we are not getting any response from the pump, even if we are getting a proper LS signal, what should we do?

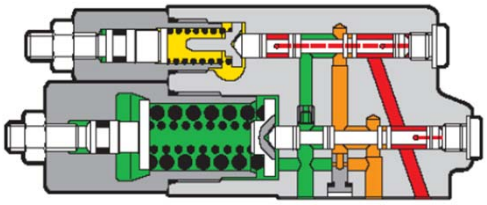

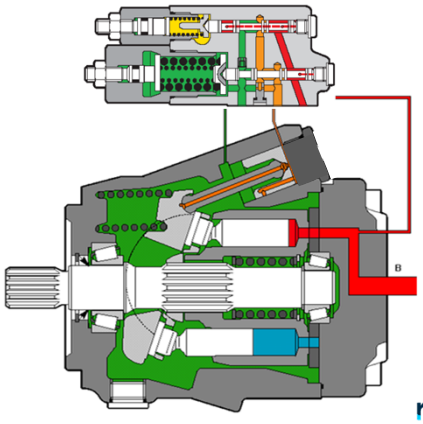

rexroth
A Bosch Company

C-S: A10VO pumps, a real life application review

Will the pump fail if we use the incorrect controller?

What will happen?

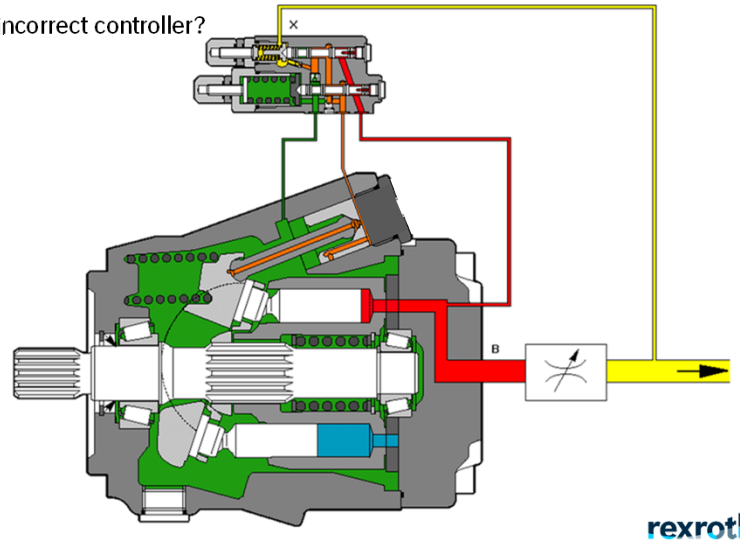

rexroth
A Bosch Company

C-S: A10VO pumps, a real life application review

I have this controller on the shelf.

To which pump does it belong?

Is it an DFR or an DFR1?

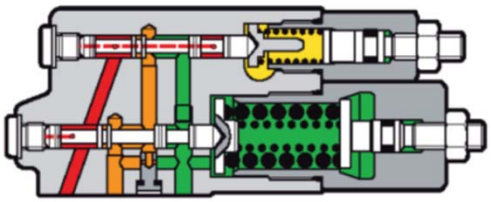

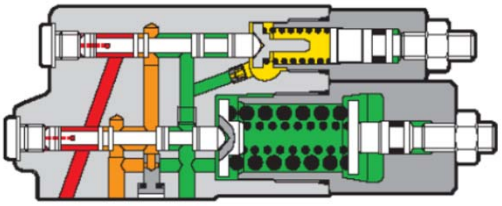

rexroth
A Bosch Company

M4 torque values: Inlet Tie-rods

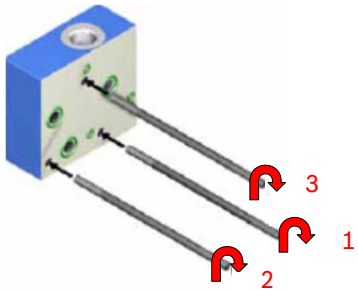

Using **NO** Loctite® on the tie-rod threads (short thread end goes into inlet), hand tighten such that you can feel the thread and then torque to 10 Nm or 7.5 ft.lb using a torque wrench.

rexroth
A Bosch Company

M4 torque values: valve slices and end cover

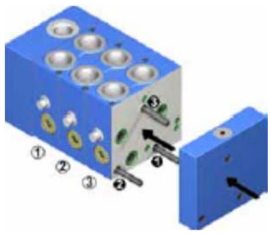

Using no Loctite® on the nuts, thread them onto the tie-rods by hand, turning clockwise (CW) and without using any washers or lock washers.
Note: do not grease section 'o'-rings!

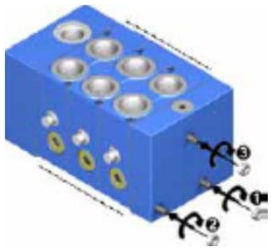

With all the slices or sections properly aligned between inlet and end cover, start to tighten the nuts starting from the bottom right (1) in a clockwise (CW) manner, going from 20 Nm (15 ft.lb) to 36 Nm (27 ft.lb) and finally to 40 Nm (30ft.lb) using a torque wrench.

rexroth
A Bosch Company

M4 torque values: mechanically actuated (cable)

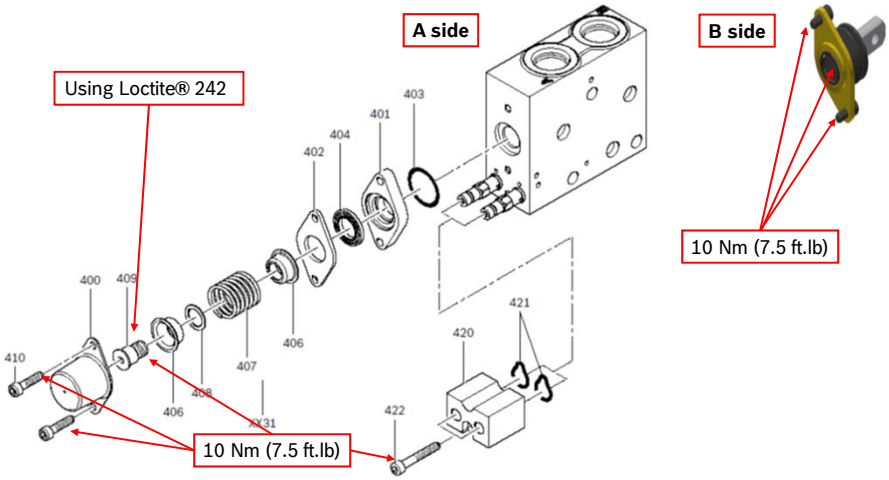

rexroth
A Bosch Company

M4 torque values: mechanically actuated (cable) with detent

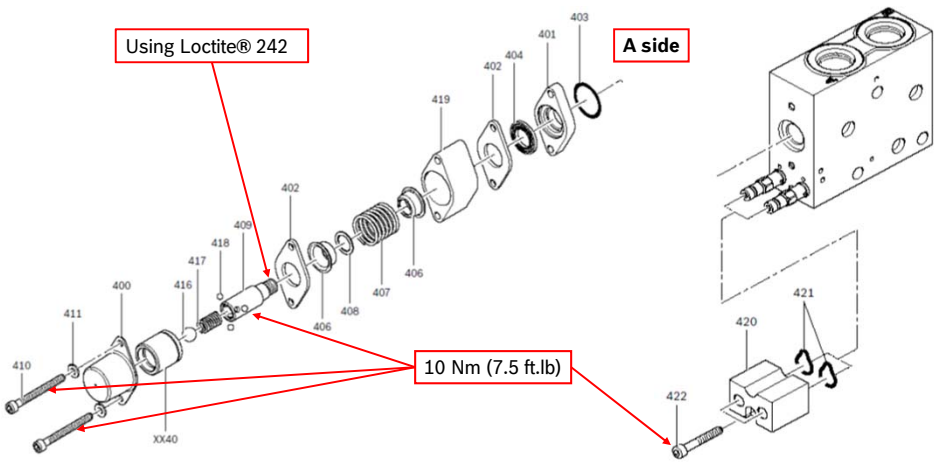

rexroth
A Bosch Company

M4 spool seal for mechanical & pneumatic slices

Dust lip **always facing away from housing**

This side faces into the housing is fully coated with rubber.

This side faces away from the housing and is metallic looking in color.

Lightly lubricate the I.D. of the shaft seal when assembling or repairing.

rexroth
A Bosch Company

M4 torque values: pneumatically actuated

Using Loctite® 222

A side

B side

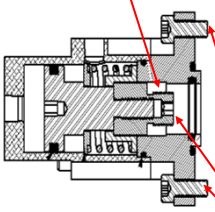

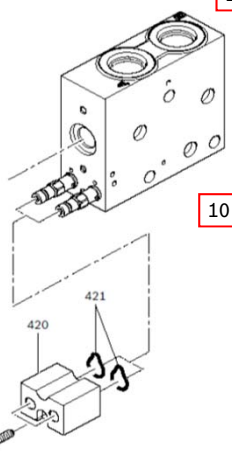

10 Nm (7.5 ft.lb)

10 Nm (7.5 ft.lb)

rexroth
A Bosch Company

R987376062 PNEUMATIC SHIFTER

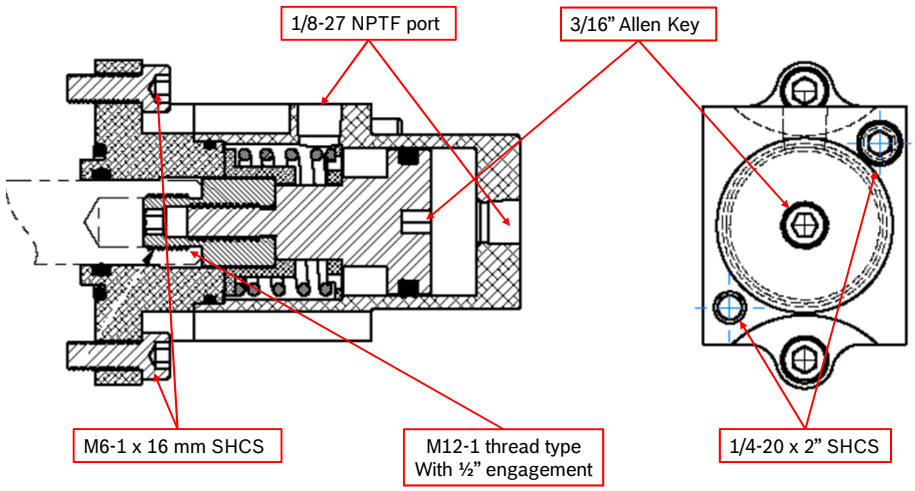

rexroth
A Bosch Company

How to change an "air cylinder" (slide 1 of 3)

- Start by removing the spool assembly (spool, tang and pneumatic actuator) by loosening the two SHCS (item 4) which normally fasten the pneumatic actuator to the M4 housing.
- Using the clamping tool to clamp the spool, such that it does not rotate, using an allen key (A/K), loosen the pneumatic actuator off of the spool be turning it counter clockwise (CCW) when facing the back port of the pneumatic actuator
- Clean the old Loctite from the end of the spool, spray Loctite cleaner in the .I.D. thread of the spool (16) and then, by applying Loctite 222 onto the male thread of the pneumatic actuator (6). This is point 3 as found below.
- Note: Sometimes the actuator disassembles between item 6 & 11 as that piece is threaded as well. Should that occur, continue by removing the bonnet which covers the piston (11) by loosening the two SHCS which fastens the bonnet to item 3, the flange.
- Item 6 also has an hex machined in it, hence, using the same allen key, (6) can be removed from the spool (16). Clean the male thread of item 11 and the female thread of 6 and use Loctite cleaner on the threads. Then Loctite using 242 after re-assembling.
- With the old pneumatic actuator assembly now removed, the new "air cylinder" can now be installed, provided the spool and housing are still in good working condition.

rexroth
A Bosch Company

How to change an “air cylinder” (slide 2 of 3)

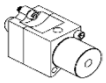

INSTALLATION OF PNEUMATIC ACTUATOR:

1. ACTUATOR DOES NOT HAVE TO BE DISASSEMBLED TO INSTALL
2. INSTALL O-RING (1) INTO FACE GROOVE OF ALUMINUM ADAPTER PLATE (3)
   (USE A SMALL AMOUNT OF GREASE TO ASSIST O-RING RETENTION)
3. APPLY A REMOVABLE GRADE OF "LOCTITE" (16) TO THREADED ID PORTION OF VALVE SPOOL (M12 x 1)
4. WHILE KEEPING O-RING RETAINED IN ADAPTER PLATE, ATTACH ACTUATOR ASS'Y ON TO VALVE SPOOL
   BY USING A 3/16" HEX WRENCH ENGAGED IN PISTON (11) HEX POCKET
   (ACCESSED THROUGH THE 1/8" NPT FITTING PORT IN BACK SIDE OF ACTUATOR ASS'Y),
   AND THREAD THE STOP (6) INTO VALVE SPOOL,
5. HOLD SPOOL FROM ROTATING ON OPPOSING END, TIGHTEN TO ~ 10-12 FT. LBS
6. SEAT ACTUATOR ASS'Y AGAINST VALVE FACE, AND ORIENT TO MATCH UP BOLT PATTERN
   MOUNT ADAPER PLATE TO VALVE FACE WITH (2 EA.) M6 -1 x 16 MM LG. SKT. HD. CAP SCREWS (4),
   USING A 5MM (3/16") HEX WRENCH TIGHTEN BOLTS TO ~ 6-9 FT. LBS
7. TEST FOR PROPER ALIGNMENT BY TURNING VALVE SPOOL WITH A 3/16" HEX WRENCH
   ENGAGED IN PISTON (11), VALVE SPOOL SHOULD ROTATE FREELY
8. INSTALL FITTINGS AND AIRLINES, TEST FOR PROPER OPERATION

rexroth
A Bosch Company

How to change an “air cylinder” (slide 3 of 3)

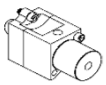

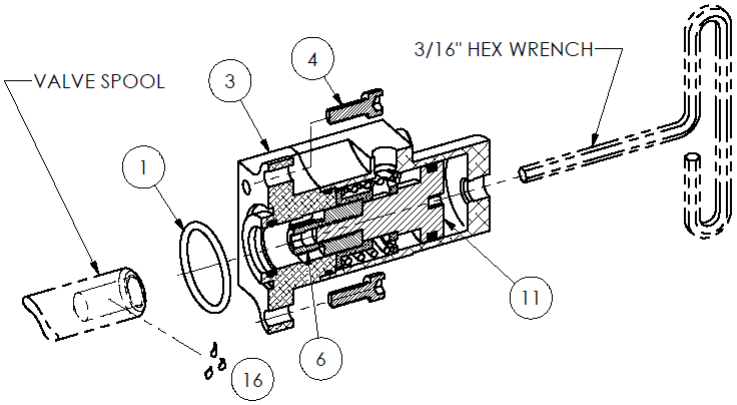

rexroth
A Bosch Company

Pneumatic actuators – non-metered; what's new?

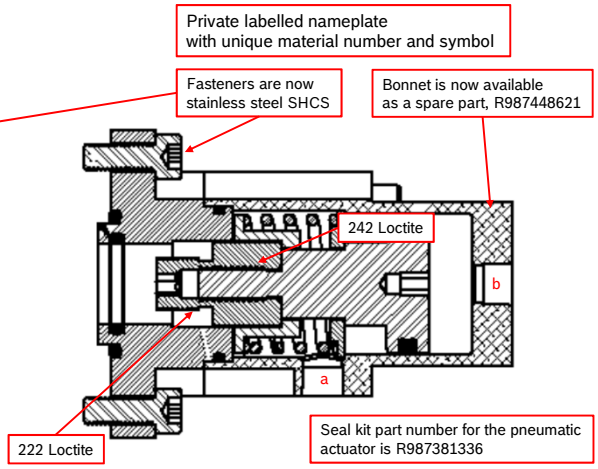

rexroth
A Bosch Company

M4 torque values: electro-hydraulically actuated, the 'A'-side

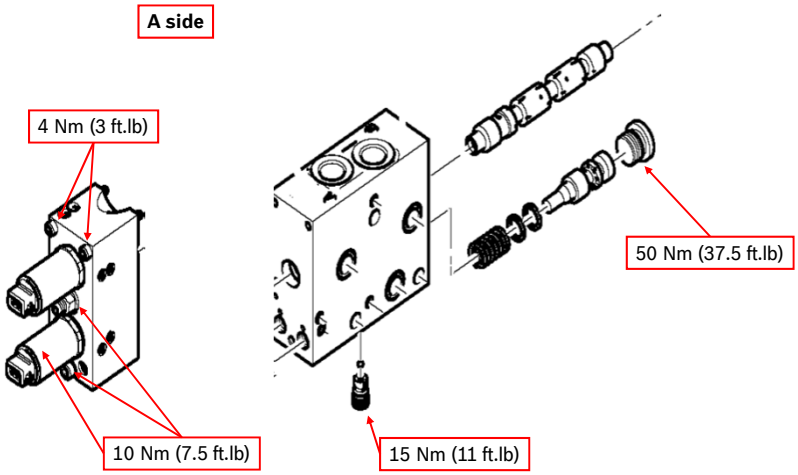

rexroth
A Bosch Company

M4 torque values: electro-hydraulically actuated, the ‘B’-side

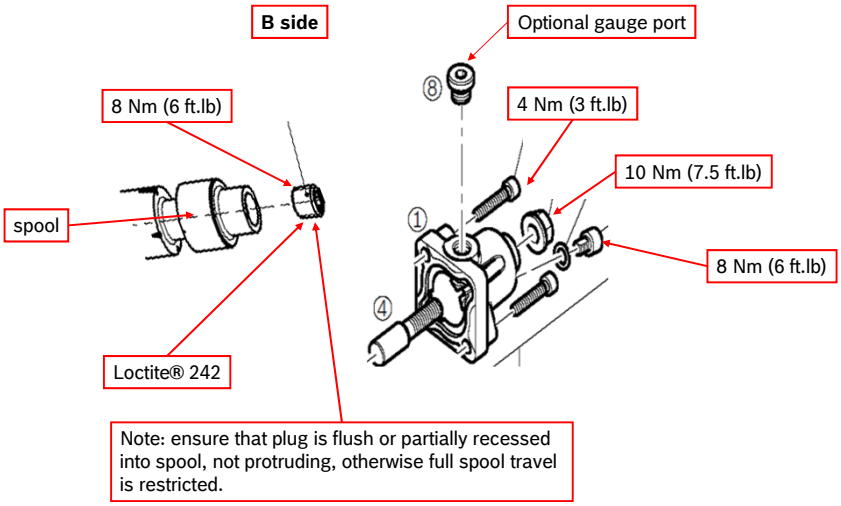

rexroth
A Bosch Company

C-S: M4 torque values: LS cartridges

Regardless of the actuator type …

All LS cartridges:
- 150 bar relief (150)
- 350 bar relief (350)
- bleed function (B)
- plugged function (Q),

all are torqued to 20 Nm or 15 ft.lb dry.
No grease or Loctite® is to be applied!

rexroth
A Bosch Company

C-S: M4-12-2X centering springs

M4-12-2X Main spool centering springs (one on each end of spool) – two types:

- Light 6-18 bar used with on/off and proportional coils (colour-coded yellow)
- Heavy 6-30 bar for hydraulic actuation (colour-coded red).
- Remember the spring collar.

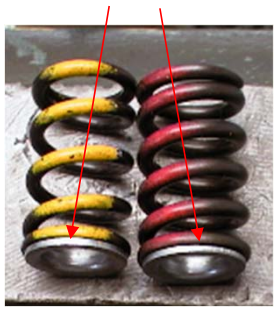

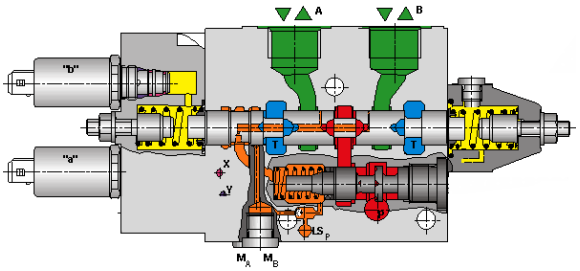

rexroth
A Bosch Company

C-S: M4 valve diagnostics

Pilot valves can be monitored for an input signal (see slide)

Pilot valves can be manually overridden (see slide)

Pressure gauges on MA and MB (see slide)

Pilot pressure can be confirmed with a pressure gauge (see slide)

Stroke limiters can be used to mechanically shift the spool

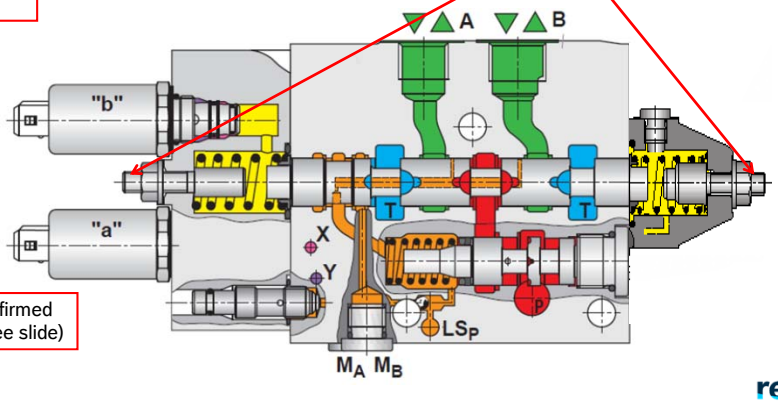

rexroth
A Bosch Company

M4 valve diagnostics: Pilot valves can be monitored for an input signal

Test Leads to measure current
R987376502

Test Leads to measure voltage
R987384170

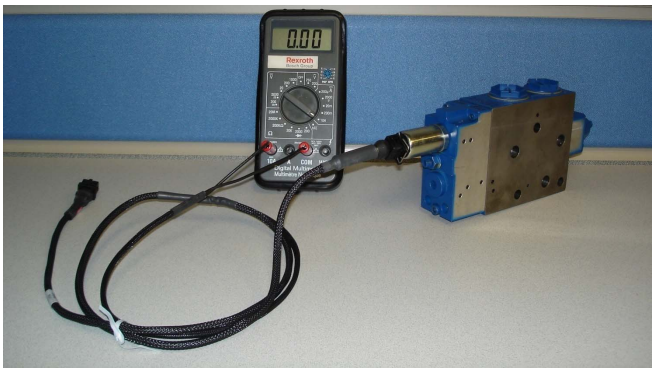

rexroth
A Bosch Company

C-S: M4 valve diagnostics: Pilot valves can be manually overridden

- on/off and proportional coils have a manual override located in the middle of the connector.
- An 2 mm Allen Key will do the trick! Don't be rough with it, and do not use a sharp object such as a screw driver, as scoring can cause leakage across the 'o'-ring!

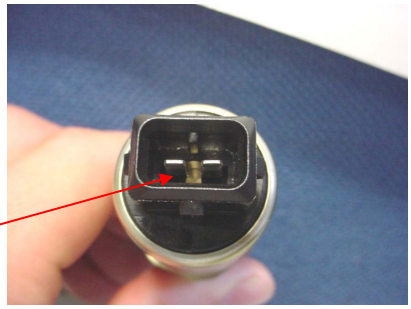

Ohmic Resistance of coils (at 68 °F)	
12 VDC On/Off (blue)	10 Ω
12 VDC proportional (black)	2.4Ω

rexroth
A Bosch Company

M4 valve diagnostics: reading pilot pressure at the ‘X’ or ‘X1’-port

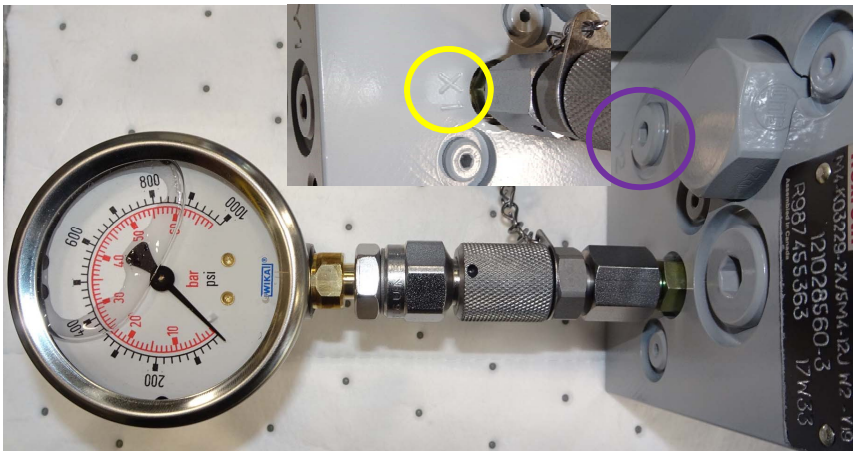

rexroth
A Bosch Company

M4 valve diagnostics: reading pilot pressure at the ‘X’ or ‘X1’-port

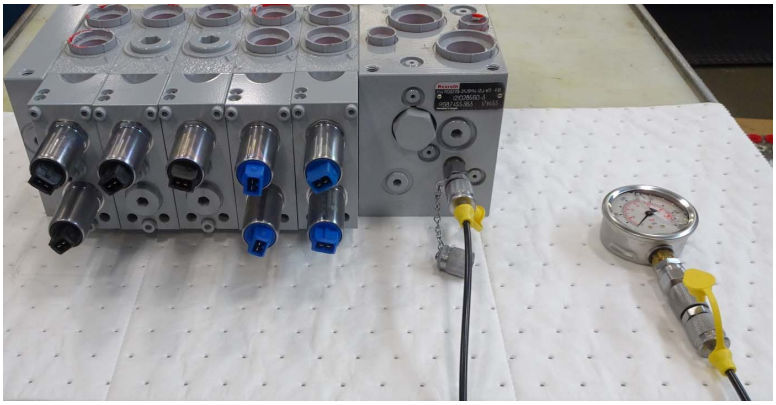

rexroth
A Bosch Company

M4 valve diagnostics: reading on an 'MA'-port (LS pressure) of a valve slice

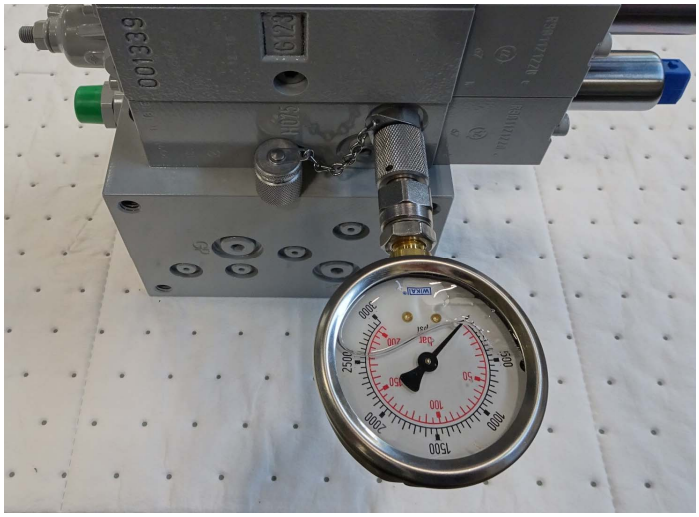

rexroth
A Bosch Company

M4 valve diagnostics: reading on an 'MA'-port (LS pressure) of a valve slice

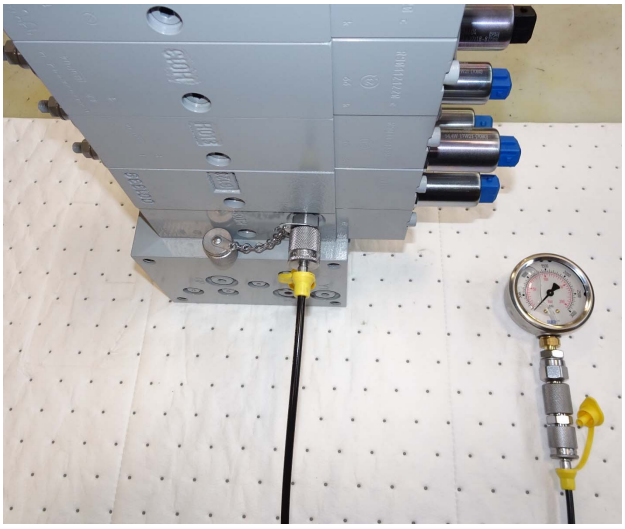

rexroth
A Bosch Company

C-S: M4 valve diagnostics: one way of carefully bleeding air out of a function

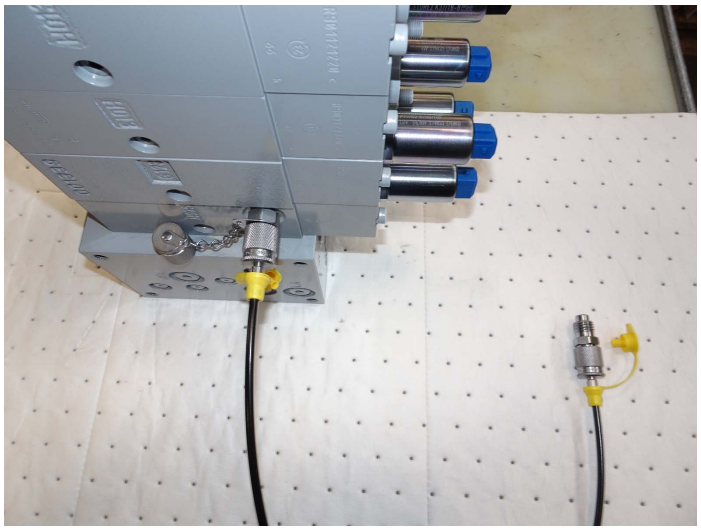

rexroth
A Bosch Company

C-S: M4 valve diagnostics

- Please **always check** the number of shims and spring orientation!
- Depending on the flow requirement for that slice, either 2x shims, 1x shim or no shims (spacer rings) are required. Spacer ring material # is R900889721
- M6 thread machined in the pressure compensator spool for easy removal of spool out of M4 housing.

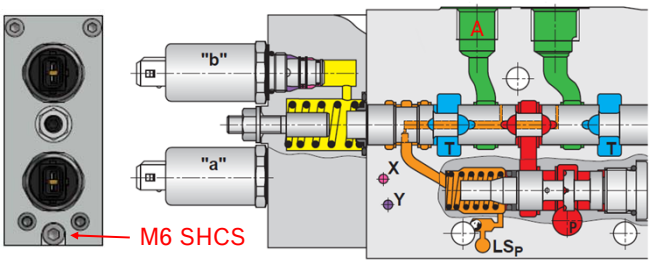

rexroth
A Bosch Company

C-S: M4-12 valve symmetrical spools

E-H or H actuated symmetrical spools

pilot operated

Q (l/min)	Q (USGPM) *	spool material # cylinder 'E'	spool material # motor 'J'	# of shims
005-005	1.25			0
006-006	1.5	R901094304	R901108579	1
007-007	2			2
010-010	2.5			0
012-012	3	R901039175	R901039167	1
014-014	3.7			2
017-017	4.5			0
020-020	5	R901039173	R901039166	1
023-023	6			2
026-026	7			0
030-030	8	R901039172	R901039165	1
034-034	9			2
038-038	10			0
045-045	12	R901039171	R901039163	1
052-052	13			2
057-057	15			0
065-065	16	R901039169	R901039162	1
073-073	20			2
070-070	18			0
085-085	22	R901039168	R901039161	1
100-100	26			2
110-110	29			0
120-120	31	R901107414	R901107723	1
130-130	33			2

pneumatically or mechanically actuated symmetrical spools

direct acting

Q (l/min)	Q (USGPM) *	spool material # cylinder 'E'	spool material # motor 'J'	# of shims
005-005	1.25			0
006-006	1.5			1
007-007	2			2
010-010	2.5			0
012-012	3	R901199354	R901130112	1
014-014	3.7			2
017-017	4.5			0
020-020	5	R901205456	R901205459	1
023-023	6			2
026-026	7			0
030-030	8	R901199375	R901205477	1
034-034	9			2
038-038	10			0
045-045	12	R901199364	R901199368	1
052-052	13			2
057-057	15			0
065-065	16	R901199371	R901199356	1
073-073	20			2
070-070	18			0
085-085	22	R901199373	R901205480	1
100-100	26			2
110-110	29			0
120-120	31	R901199410	R901199411	1
130-130	33			2

15

* Conventional flow rate

rexroth
A Bosch Company

C-S: M4-12 valve spool's material

'A'-side

'B'-side

1039165B39/17 is what is etched on the spool

This makes it an R901039165 spool which from the previous table means that it is an motor spool for an electro-hydraulically actuated slice with a nominal flow rate of 8 USGPM with one shim, often used for a spinner or pre-wet slice.

The 'B' is the internal revision number.

The 39/17 is the date of manufacture, indicating the calendar week and the year

rexroth
A Bosch Company

M4-12-2X series housing types as used in C-S

pilot operated

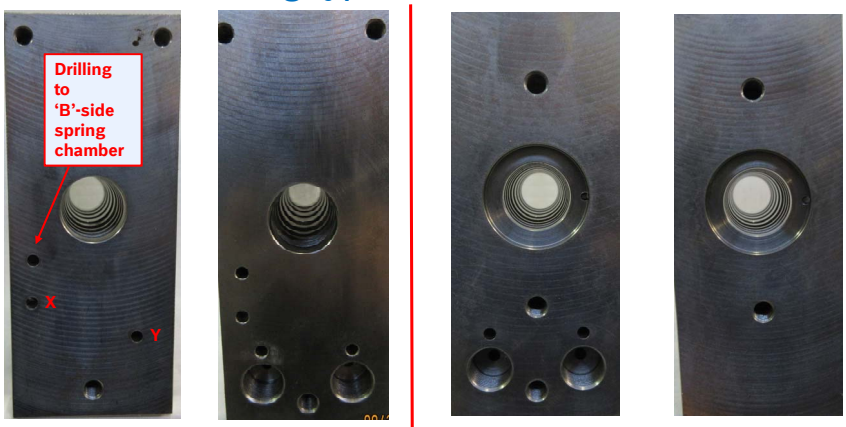

Hydraulic or Electro-hydraulic Housing

No LS reliefs

With LS reliefs

Pneumatic or Mechanical Housing

With LS reliefs

No LS reliefs

direct acting

rexroth
A Bosch Company

M4 Trouble Shooting - The goal is not to open the control block

- Electro-hydraulic section will not function:
- Load sense relief valves are not functioning:
- Internal pilot pressure is higher than 40 bar:

- 'Y'-port connection is plugged; this port must be connected directly to tank.

- Electro-hydraulic section will not function:

- No pilot pressure, check pressure at 'X'-port, or now also the 'X1'-port on the lateral or mid-inlet.

- Electro-hydraulic section will not function:

- Check electrical supply
- Try manual over-ride at the FT pilot valve
- Faulty FT pilot valve cartridge
- Remember: 12 & 24VDC versions are available!

rexroth
A Bosch Company

M4 Trouble Shooting - The goal is not to open the control block

- Electro-hydraulic section:
  - Spool shifts – no response:
    - Check system pressure (including main relief; sometimes more than one main relief valve in the system)
    - For Open Centre Inlet, unloading inlets minimum is 8 bar
    - For Closed Centre Inlet, minimum is 15 bar, recommended 25 bar (360 psi)
    - Load sense relief valves are backed out
    - Check Load Sense pressure at lateral inlet 'GLS'-port, or mid-inlet 'LS5'-port when shifting the spool
    - Pressure Compensator spool stuck in valve slice
    - Unloading compensator spool stuck (for Open Centre Inlets)
    - Load sense shuttle valve blocked or LS passage plugged (including hose)

rexroth
A Bosch Company

M4 Trouble Shooting - The goal is not to open the control block

- High pressure in neutral position:
  - Check main spool centering
  - Load sense pressure is blocked, not bleeding to tank (remember that the LS signal is a daisy chain function, where multiple shuttle valves ('OR' Gates) are plumbed together in sequence).

rexroth
A Bosch Company

C-S: M4-12 troubleshooting
no pilot pressure

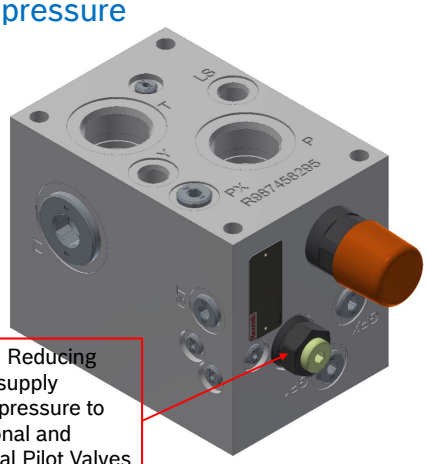

Pressure Reducing Valve to supply reduced pressure to Proportional and Directional Pilot Valves (non-adjustable)

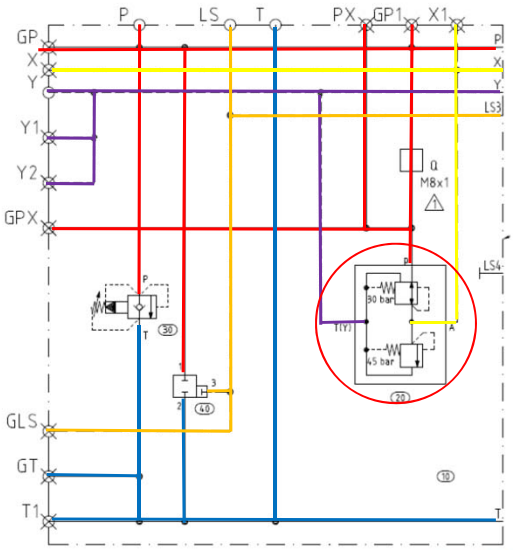

rexroth
A Bosch Company

Compu-Spread: M4-12 inlet's 3-way reducing valve,
the source of the system's pilot pressure

Normally for Compu-Spread systems, the reducing valve has a spring equivalency rating of 30 bar (450 psi) and a relieving pressure of 45 bar (600 psi).

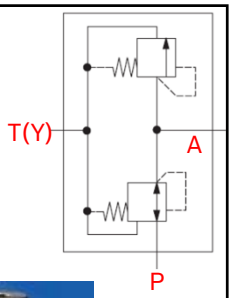

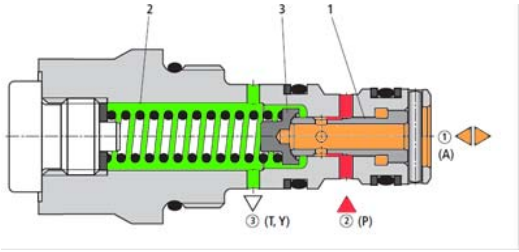

rexroth
A Bosch Company

Compu-Spread: M4-12 inlet's 3-way reducing valve,
the source of the system's pilot pressure

reducing/relieving phase

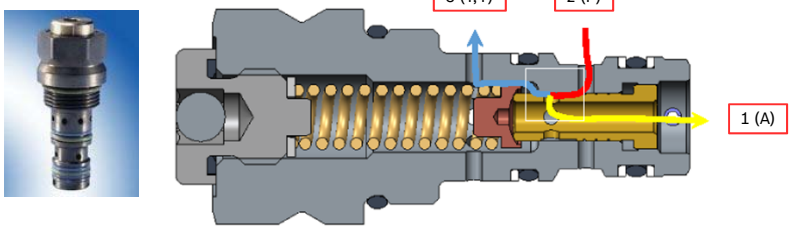

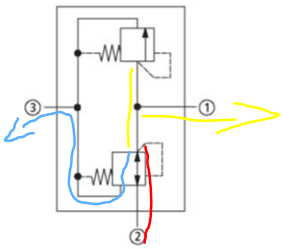

rexroth
A Bosch Company

Compu-Spread: M4-12 inlet's 3-way reducing valve,
the source of the system's pilot pressure

emergency relieving phase

Spring retainer lifts off of spool and relieves excess pressure

Piston stuck due to contamination

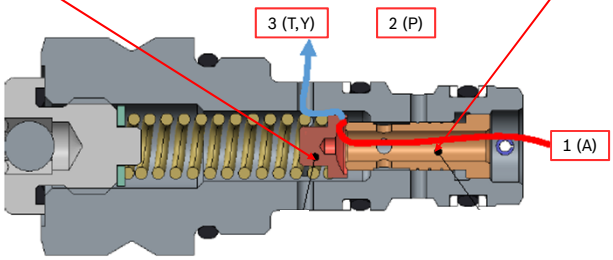

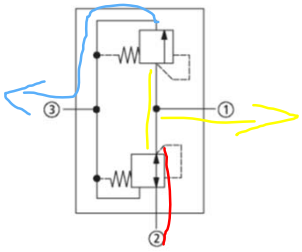

rexroth
A Bosch Company

Compu-Spread: M4-12 inlet's 3-way reducing valve

the source of the system's pilot pressure

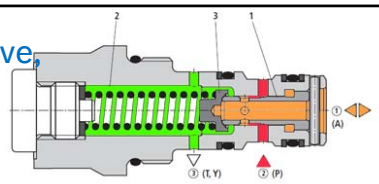

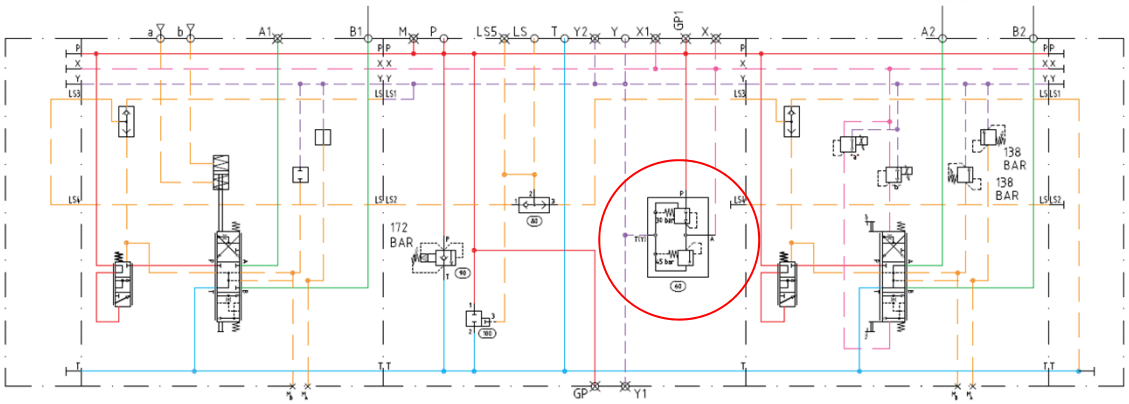

rexroth
A Bosch Company

C-S: M4-12 troubleshooting

no system pressure – main relief

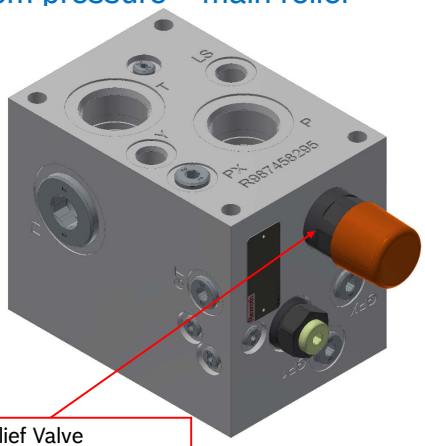

Main Relief Valve

(normally with a green cap)

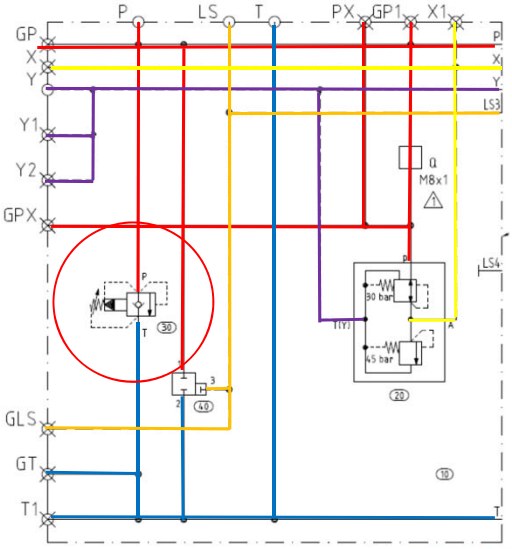

rexroth
A Bosch Company

C-S: M4-12 troubleshooting

no system pressure

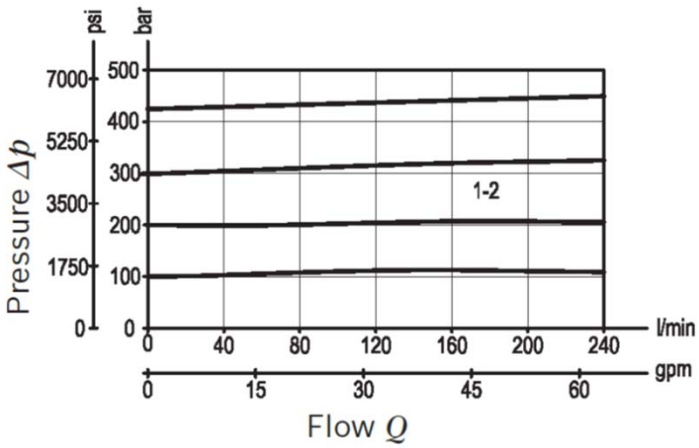

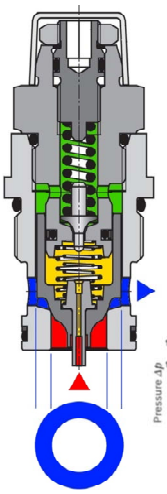

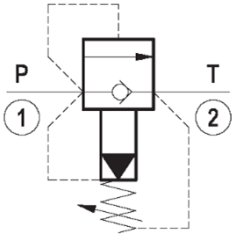

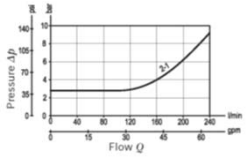

rexroth
A Bosch Company

C-S: M4-12 troubleshooting

no system pressure – unloader valve

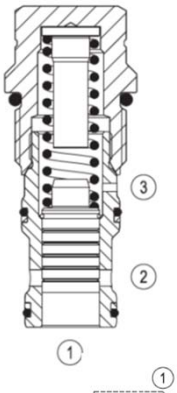

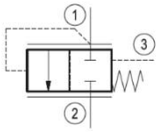

Cavity plug, R930000050
(with external hex)

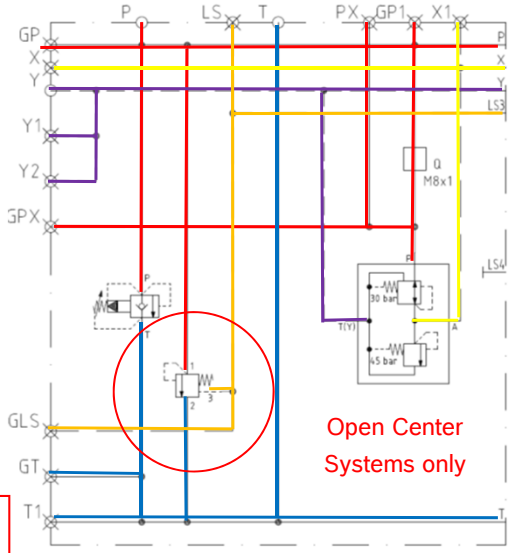

rexroth
A Bosch Company

C-S: M4-12 troubleshooting
no system pressure – cavity plug seals

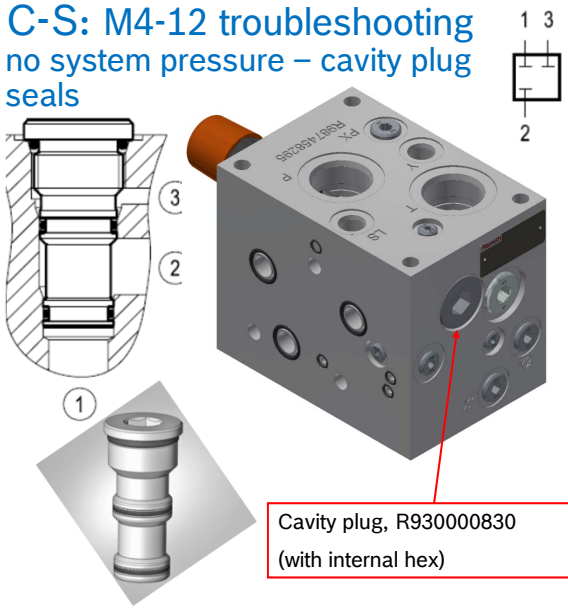

Cavity plug, R930000830
(with internal hex)

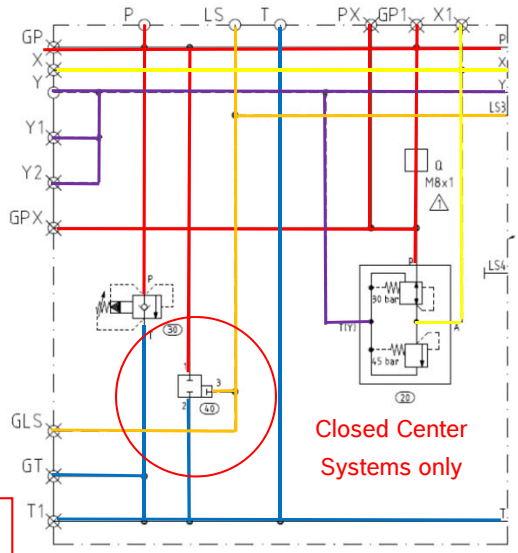

rexroth
A Bosch Company

C-S: M4-12 troubleshooting – LS relief valves are backed out

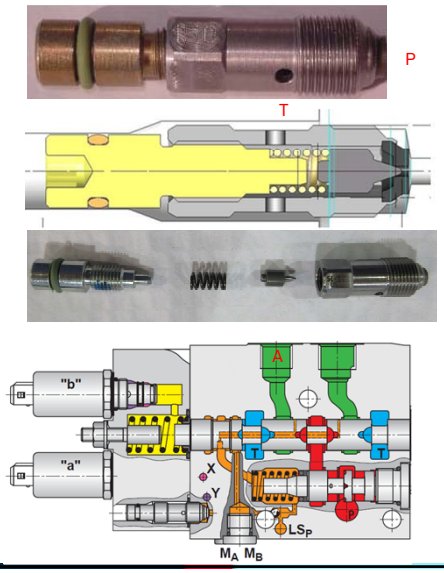

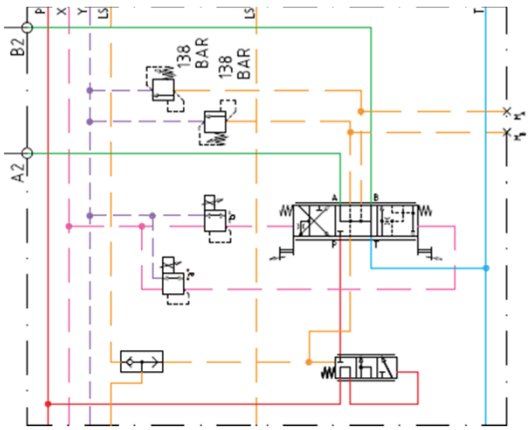

rexroth
A Bosch Company

C-S: M4-12 troubleshooting
Check LS pressure at the lateral inlet ‘GLS’-port

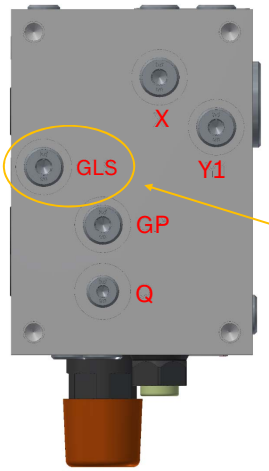

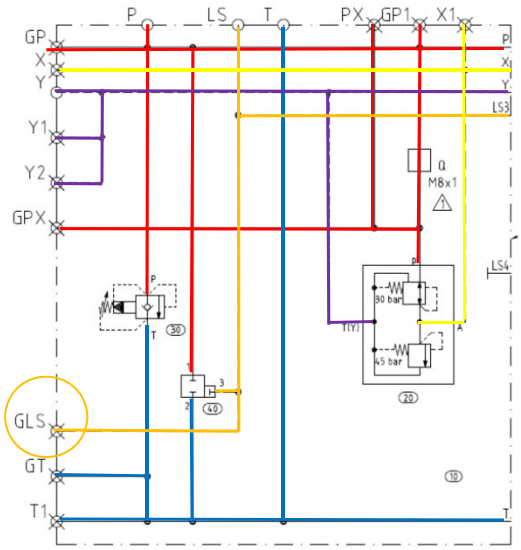

8

rexroth
A Bosch Company

C-S: M4-12 troubleshooting - Check LS pressure at the lateral inlet ‘GLS’-port

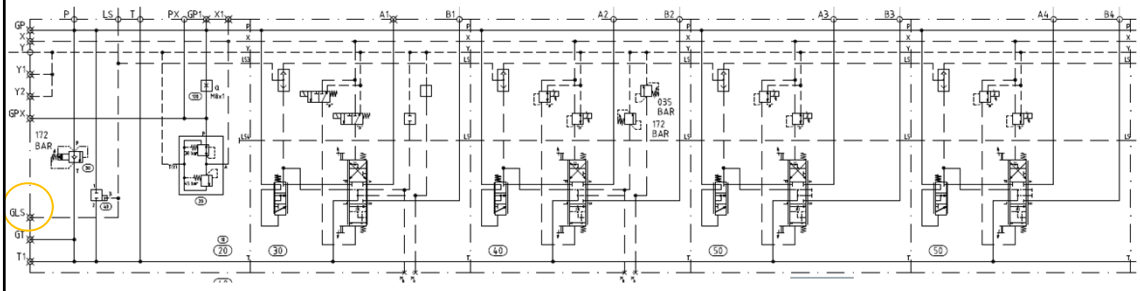

rexroth
A Bosch Company

C-S: M4-12 troubleshooting

Check LS pressure at the mid-inlet ‘LS5’ port

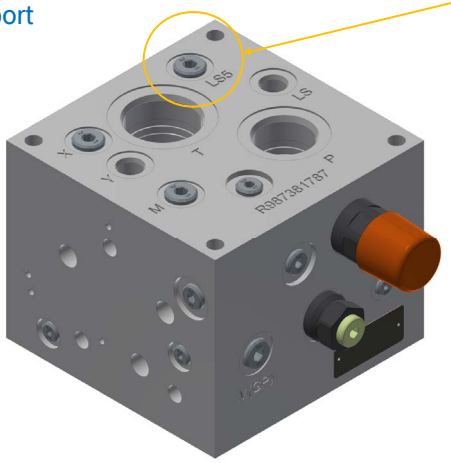

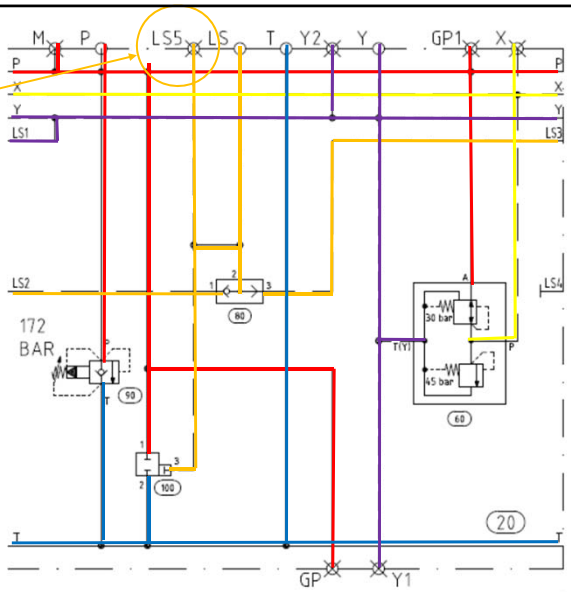

rexroth
A Bosch Company

C-S: M4-12 troubleshooting - Check LS pressure at the mid-inlet ‘LS5’- port

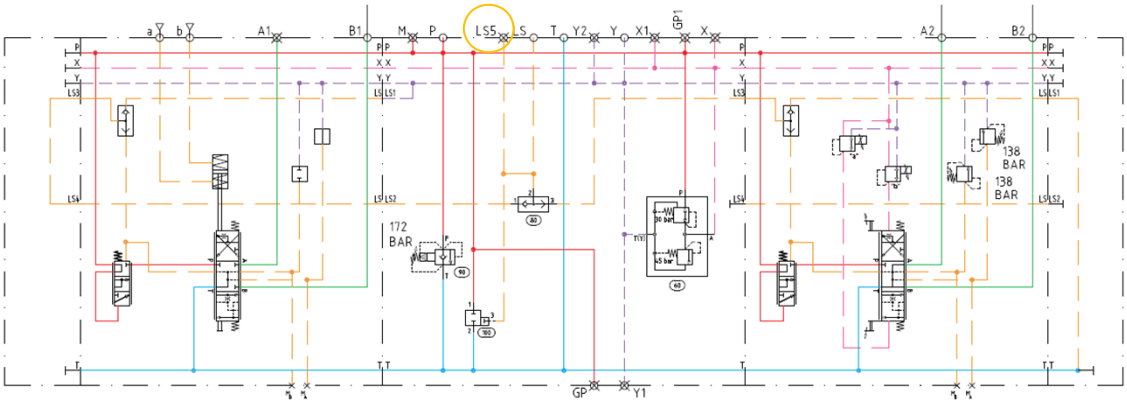

rexroth
A Bosch Company

Compu-Spread: M4-12 troubleshooting tip before pulling out the slice

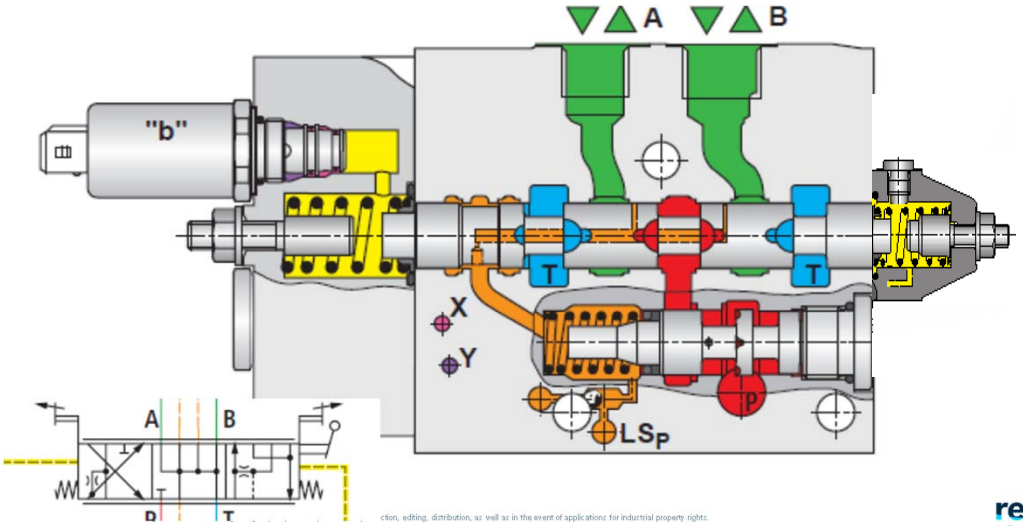

rexroth
A Bosch Company

Compu-Spread: M4-12 troubleshooting tip before pulling out the slice

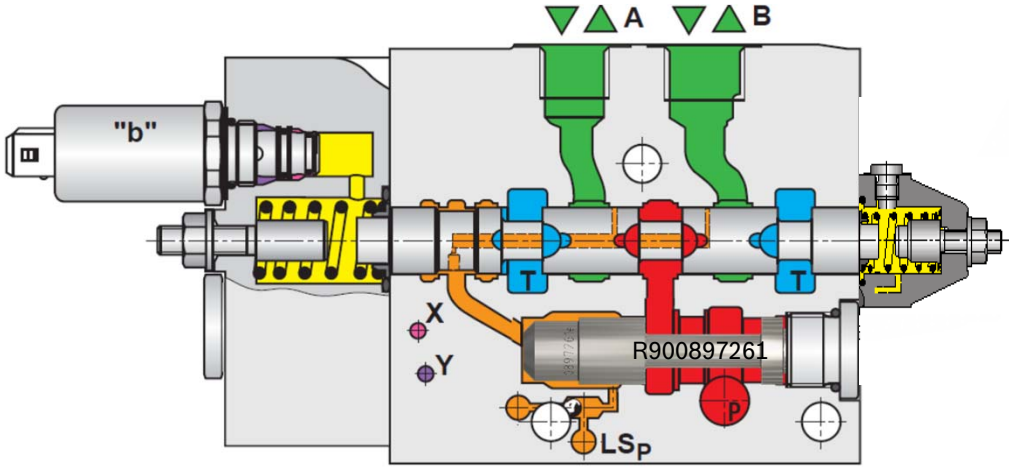

rexroth
A Bosch Company

C-S: M4-12 troubleshooting – high pressure in neutral; check main spool centering

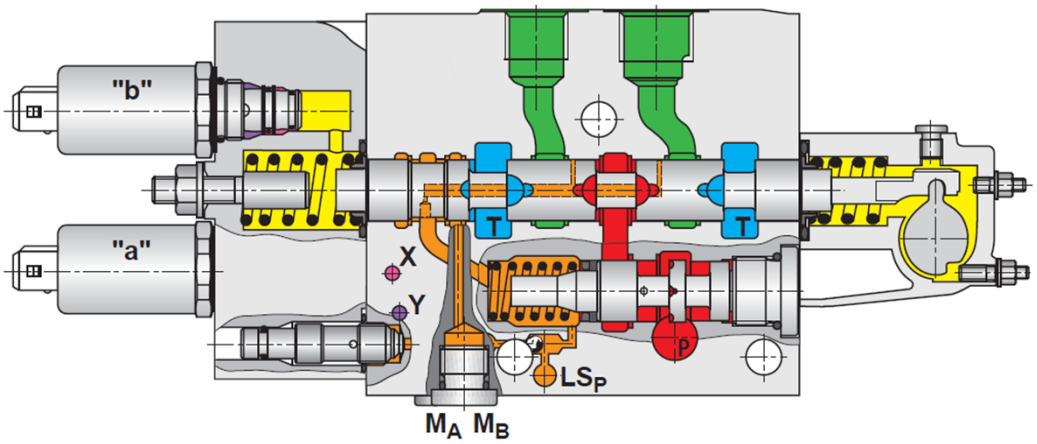

rexroth
A Bosch Company

C-S: M4-12 troubleshooting - LS shuttle valve blocked or LS passage plugged

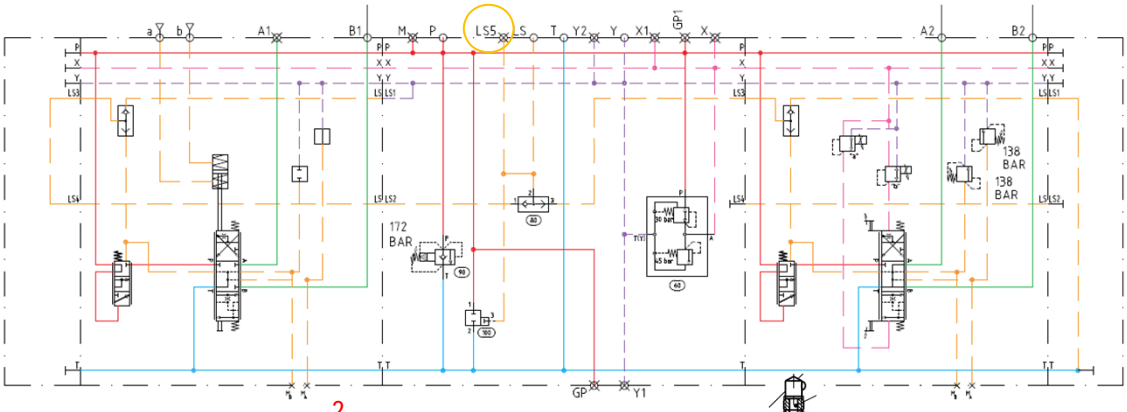

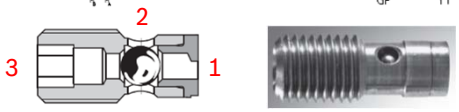

rexroth
A Bosch Company

C-S: M4-12 troubleshooting - LS shuttle valve blocked or LS passage plugged

Mid-inlet shuttle valve location

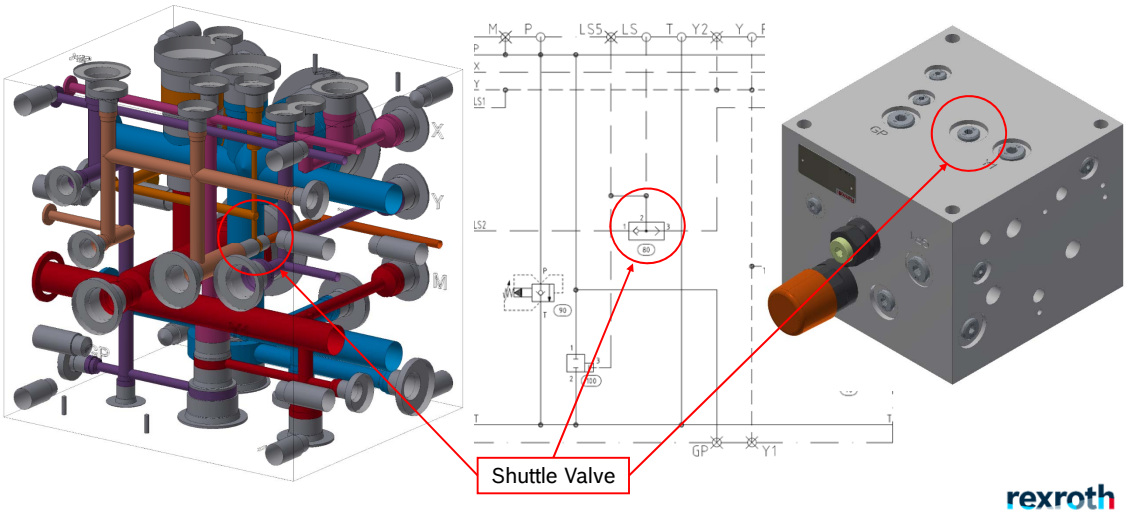

rexroth
A Bosch Company

C-S: M4-12 troubleshooting: external location of all LS shuttle valves

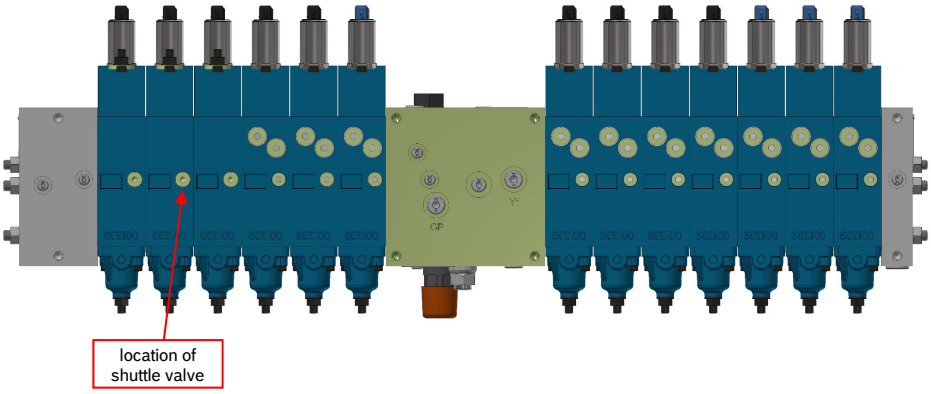

rexroth
A Bosch Company

M4-12 230106

CS-M4-12 series 2X bankable valve

Understanding the shuttle valve

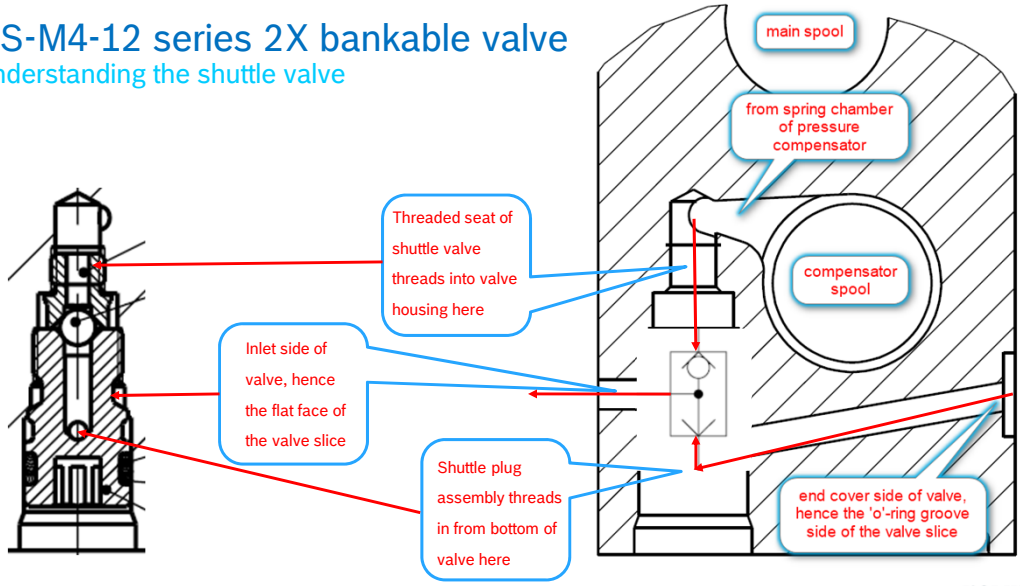

rexroth
A Bosch Company

CS-M4-12 series 2X bankable valve

Understanding the shuttle valve

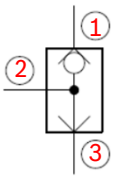

This is a metal to metal seal to seal between ports '2' & '3'

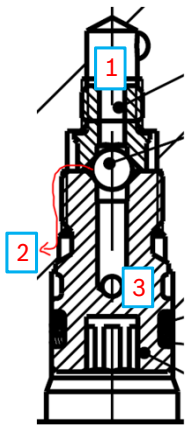

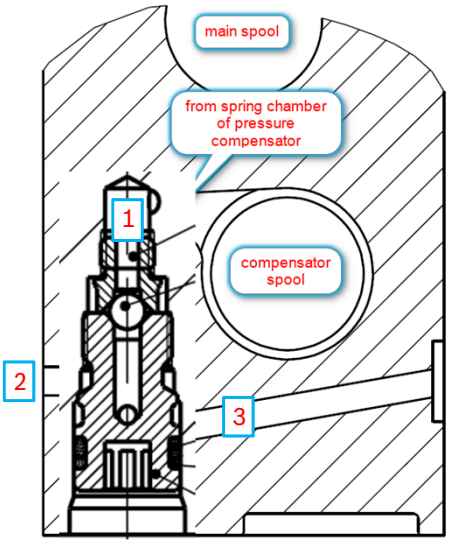

rexroth
A Bosch Company

C-S: M4-12 troubleshooting – high pressure in neutral; LS pressure signal is blocked & cannot bleed away

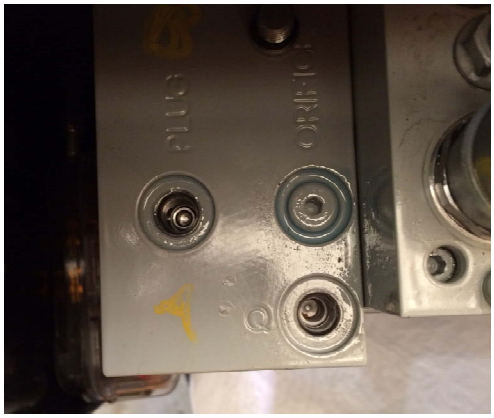

-----Original Message-----
From:
Sent: April 11, 2018 11:59 AM
To: Richard
Cc: Kevin; de Waard Franklin
Subject: RE: Stuck spool
Importance: High

Hi Richard ,
Just a heads up , we [are] still having trouble with this unit . not able to stay in stand by .

rexroth
A Bosch Company

C-S: M4-12 troubleshooting – high pressure in neutral; LS pressure signal is blocked & cannot bleed away

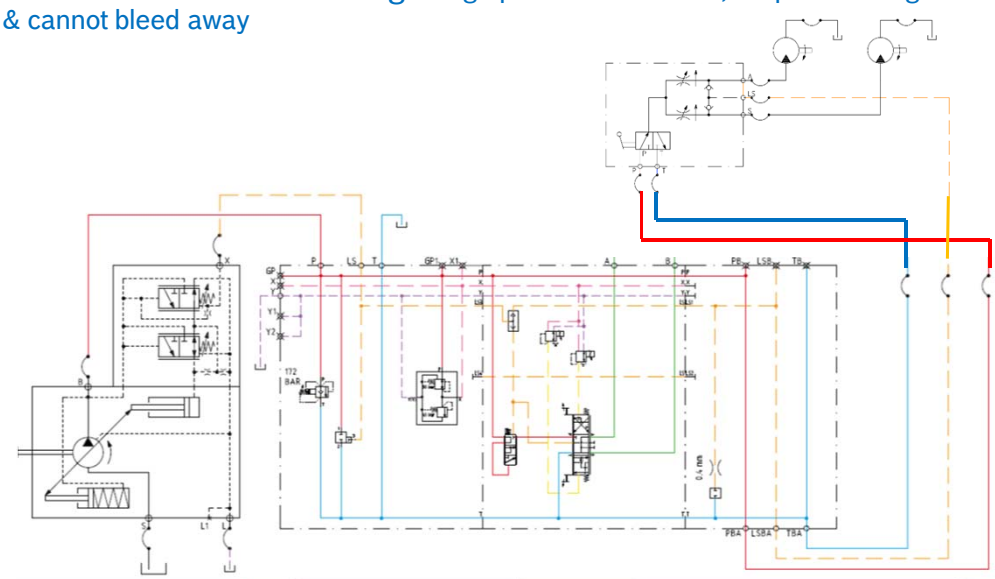

xroth
sch Company

C-S: retrofitting after delivery, such as adding another function

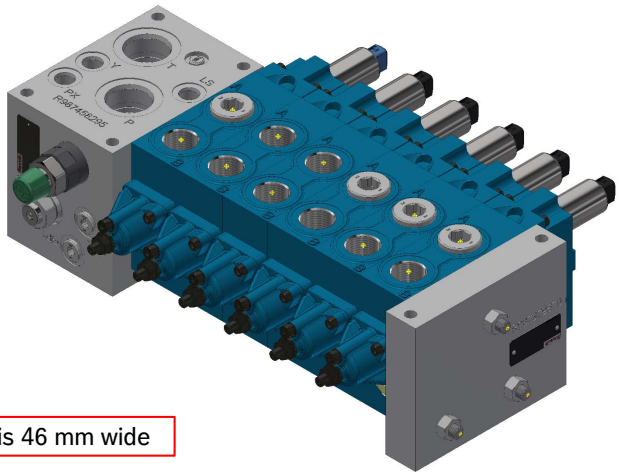

each slice is 46 mm wide

rexroth
A Bosch Company

C-S: M4-12

M10 tie rods (studs) as per DIN835

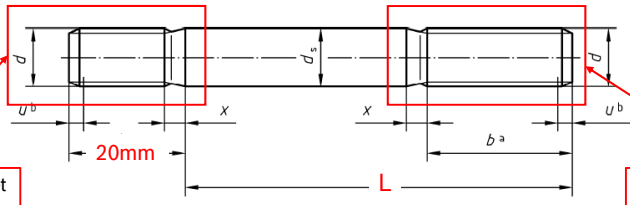

Always threads into inlet without using Loctite®

This end for the M8 nut without using Loctite®

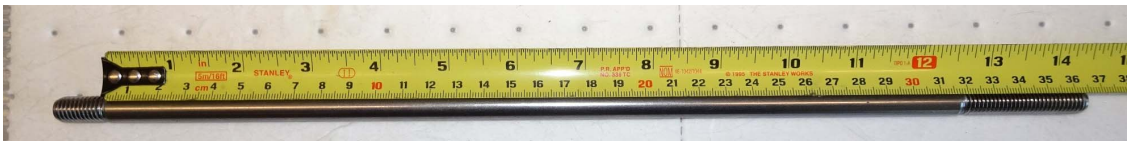

TIE ROD (STUD) DIMENSION IN THE MODEL CODE IS THE "L" DIMENSION

rexroth
A Bosch Company

C-S: M4-12

M10 tie rods (studs) as per DIN835

LATT or LUTT (or LA or LU) end covers				C-S power beyond end covers (S1 or S2)			
slices	L dimension	material #	material description	L dimension	material #	material description	slices
1	90 mm	R900023339	DIN835-M10X90-8.8	140 mm	R900023697	DIN835-M10X140-8.8	1
2	140 mm	R900023697	DIN835-M10X140-8.8	180 mm	R900023640	DIN835-M10X180-8.8	2
3	180 mm	R900023640	DIN835-M10X180-8.8	230 mm	R900023007	DIN835-M10X230-8.8	3
4	230 mm	R900023007	DIN835-M10X230-8.8	270 mm	R900017426	DIN835-M10X270-8.8	4
5	270 mm	R900017426	DIN835-M10X270-8.8	320 mm	R900017427	DIN835-M10X320-8.8	5
6	320 mm	R900017427	DIN835-M10X320-8.8	365 mm	R900076402	DIN835-M10X365-8.8	6
7	365 mm	R900076402	DIN835-M10X365-8.8	420 mm	R900076404	DIN835-M10X420-8.8	7
8	420 mm	R900076404	DIN835-M10X420-8.8	470 mm	R900075187	DIN835-M10X470-8.8	8
9	470 mm	R900075187	DIN835-M10X470-8.8	520 mm	R900076403	DIN835-M10X520-8.8	9 *
10	520 mm	R900076403	DIN835-M10X520-8.8	570 mm	R987379642	not an DIN stud	10 **

* note: when an 9 section valve with power beyond in an CS-VEN-M series 1X enclosure, use R987379643 CS-M4-12-2X/STUD-M10X500-8.8 such that the valve will fit the enclosure (we cut 20 mm off of the R900076403 factory tie rod)

** note: not for new projects

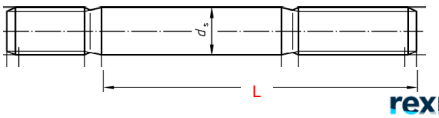

rexroth
A Bosch Company

C-S: M4-12

M10 tie rods (studs) as per DIN835

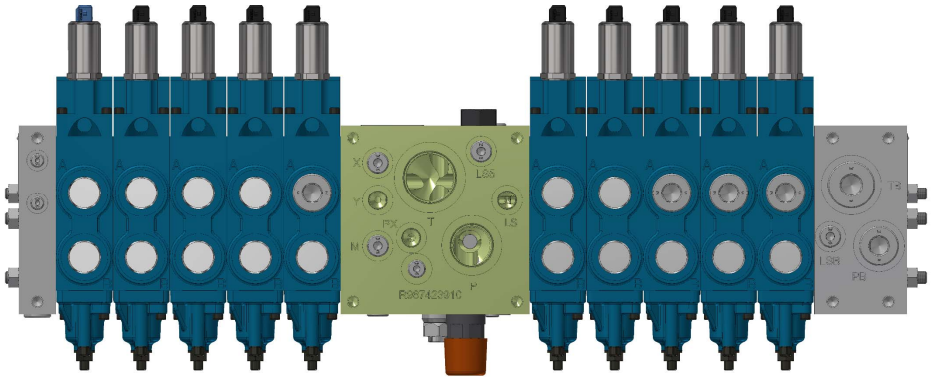

For the above valve then, what tie rods would we use?

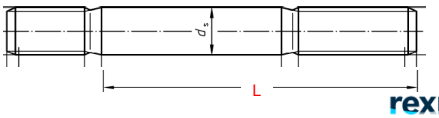

rexroth
A Bosch Company

C-S: rotary actuators (geroler/gerotor motors)

rexroth
A Bosch Company

C-S: rotary actuators (geroler/gerotor motors)

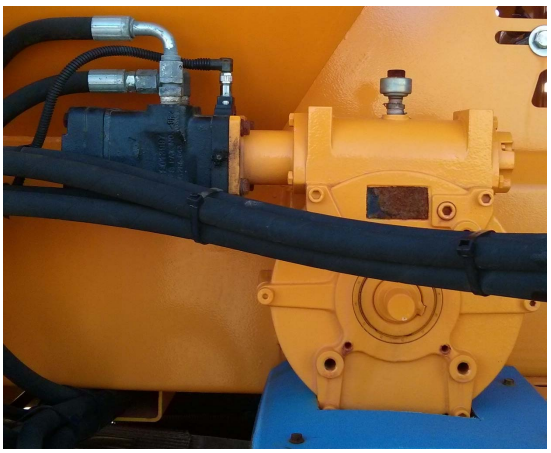

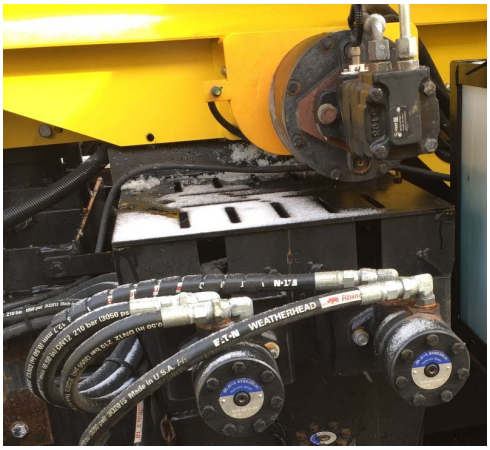

rexroth
A Bosch Company

C-S: rotary actuators (geroler/gerotor motors)

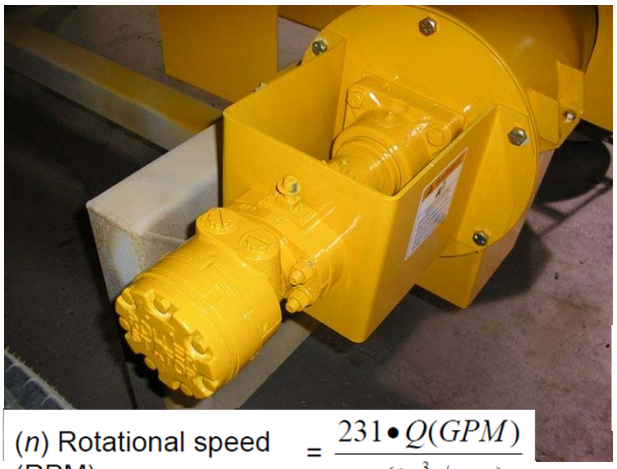

(*n*) Rotational speed (RPM) $= \dfrac{231 \bullet Q(GPM)}{v_g\,(in^3\,/\,rev)}$

(Q) Flow rate (GPM) $= \dfrac{v_g\,(in^3\,/\,rev) \bullet RPM}{231}$

rexroth
A Bosch Company

C-S: rotary actuators (geroler/gerotor motors)

LENGTH / WEIGHT CHART SAE A Mount - Dimension **A**		
Code	**mm [in]**	**kg [lb]**
050	134 [5.29]	7,3 [16.1]
080	138 [5.44]	7,5 [16.5]
090	140 [5.51]	7,6 [16.8]
100	146 [5.75]	8,0 [17.7]
110	144 [5.65]	7,8 [17.2]
125	146 [5.75]	8,0 [17.7]
160	152 [5.97]	8,3 [18.2]
200	158 [6.22]	8,5 [18.8]
250	166 [6.53]	9,0 [19.8]
300	172 [6.76]	9,3 [20.5]
400	190 [7.47]	10,3 [22.7]

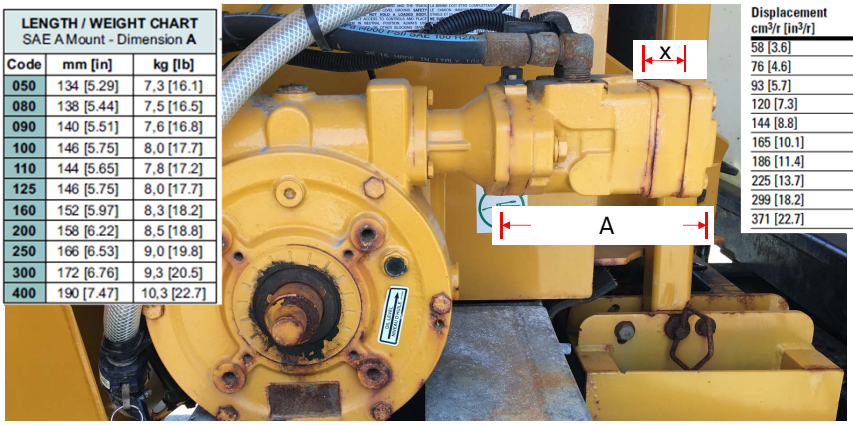

Displacement cm³/r [in³/r]	X mm [inch]	Y mm [inch]
58 [3.6]	7,5 [.30]	138,0 [5.43]
76 [4.6]	9,8 [.39]	140,3 [5.52]
93 [5.7]	12,0 [.47]	142,5 [5.61]
120 [7.3]	15,5 [.61]	146,0 [5.75]
144 [8.8]	18,6 [.73]	149,1 [5.87]
165 [10.1]	21,3 [.84]	151,8 [5.98]
186 [11.4]	24,0 [.94]	154,5 [6.08]
225 [13.7]	28,9 [1.14]	159,4 [6.28]
299 [18.2]	38,5 [1.52]	169,0 [6.66]
371 [22.7]	47,9 [1.88]	178,4 [7.02]

We have had it that a motor has been replaced with new only to find speeds could not be obtained, only to find out that they put an incorrect displacement motor on as a replacement. Therefore, manufactures use various ways to confirm LSHT displacement, with the two most common ways shown here.

rexroth
A Bosch Company

C-S: servicing the hydraulic reservoir

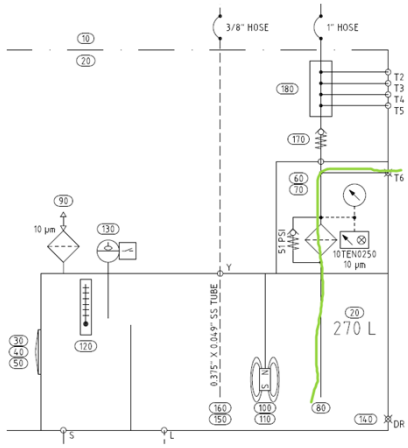

Using the 'T6'-port as the fill port, which means the fluid entering the system is already filtered prior to working

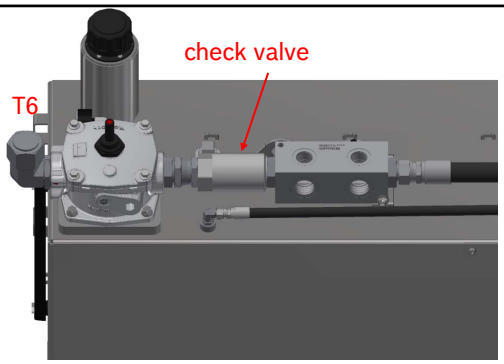

CS-RLHB (manifold) R987479098

C-S: servicing the hydraulic reservoir

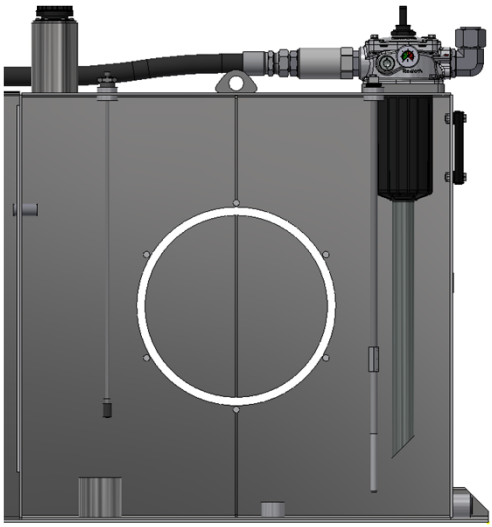

A Bosch Company

C-S: servicing the hydraulic reservoir

	After the first 100 working hours	After 3 months or 500 working hours	Once every 6 months	Once every 12 months
return filter	replace filter element	replace filter element	replace filter element	
air breather			replace air breather cap assembly	
reservoir	check magnet for ferrous material	check magnet for ferrous material	check magnet for ferrous material	Physically clean the inside

rexroth
A Bosch Company

Compu-Spread: Truck & Trailer, Sept., 2019

Questions ?

Thank-you

rexroth
A Bosch Company